STA-RITE®

SR POOL AND SPA HEATER NATURAL GAS/LP GAS

O W N E R ' S M A N U A L

INSTALLATION, OPERATION & PARTS

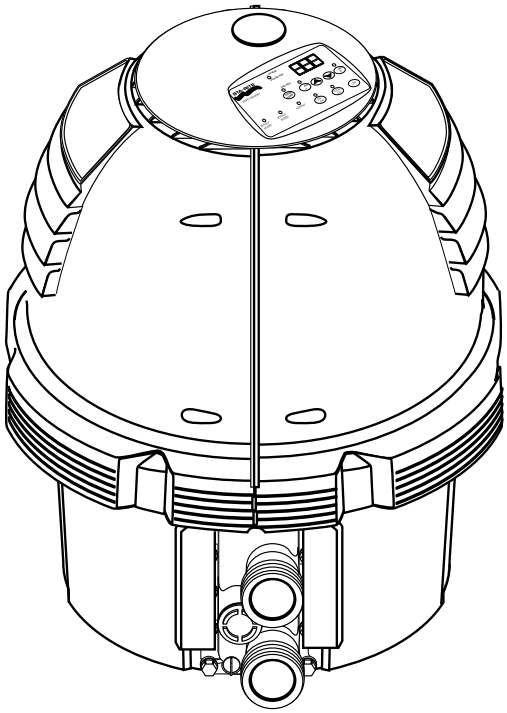

MODELS

200K BTU/HR	**SR200NA, SR200LP, SR200HD**
333K BTU/HR	**SR333NA, SR333LP, SR333HD**
400K BTU/HR	**SR400NA, SR400LP, SR400HD**

SPECIAL INSTRUCTIONS TO OWNER

Retain this manual for future reference.

This manual supplies information for the installation, operation, and servicing of the appliance. It is strongly recommended that this manual be reviewed completely before proceeding with an installation. Its use will reduce service calls and chance of injury and will lengthen product life.

⚠WARNING If the information in these instructions is not followed exactly, a fire or explosion may result causing property damage, personal injury or death.

- **Do not store or use gasoline or other flammable vapors and liquids in the vicinity of this or any other appliance.**
- **WHAT TO DO IF YOU SMELL GAS**
  - **Do not try to light any appliance.**
  - **Do not touch any electrical switch; do not use any phone in your building.**
  - **Immediately call your gas supplier from a neighbor's phone. Follow the gas supplier's instructions.**
  - **If you cannot reach your gas supplier, call the fire department.**
- **Installation and service must be performed by a qualified installer, service agency or the gas supplier.**

Sta-Rite Pool/Spa Group

293 Wright Street, Delavan, WI 53115

North America: 800-752-0183, FAX 800-582-2217
International: 262-728-5551, FAX: 262-728-4461, TELEX: ITT 4970245
www.sta-ritepool.com

Union City, TN • Delavan, WI • Mississauga, Ont. • Murrieta, CA

MEMBER
NATIONAL SPA & POOL INSTITUTE

© 2003, Sta-Rite Industries, Inc. Printed in U.S.A.

S629 (1/17/03)

INSTALLATION, OPERATION AND SERVICE MANUAL

Model SRC Pool and Spa Natural Gas Heater

TO INSTALLER:

Affix these instructions adjacent to the heater.

TO CONSUMER:

Retain these instructions for future reference.

FOR YOUR SAFETY - This product must be installed and serviced by a professional service technician, qualified in pool heater installation. Improper installation and/or operation could create carbon monoxide gas and flue gases which could cause serious injury or death. Improper installation and/or operation will void the warranty.

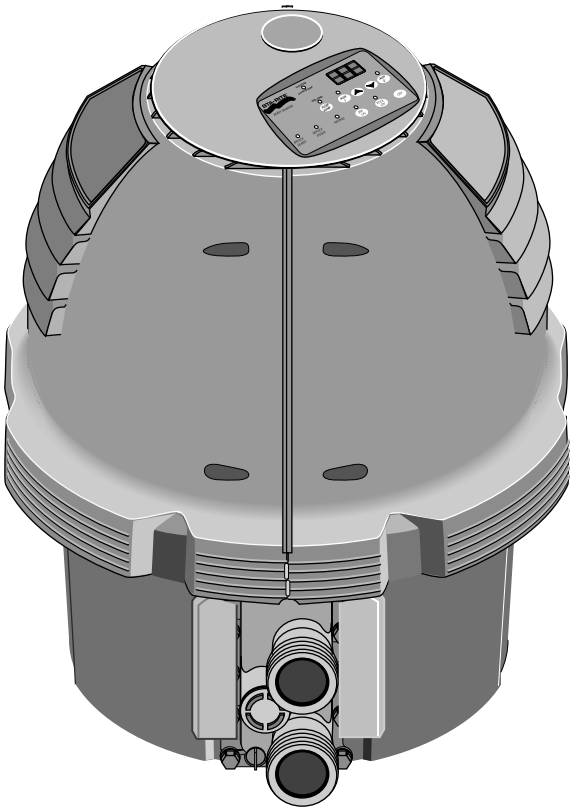

FIGURE 1

For instructions on checking the gas pressure through the Combination Gas Control Valve, See the sidebar on Page 19.

Table of Contents

Safety 2
General Specifications, Requirements 3
Description of the Heater 4
Sequence of Operation 4
Owner's Operating Instructions 4
- Before Startup 4
- What To Do If You Smell Gas 5
- Spa Temperature Caution 5
- Operating Instructions 5
- To Turn Off Gas To the Appliance 6
- Operating Control 6
- After Start-up 7

Care/Maintenance/Winterizing 8
Installation Instructions 9
- Outdoor Installation 9
- Outdoor Shelter/Indoor Installation 10-15
- Water Connections 15-18
- Pressure Relief Valve 18
- Checking Combination Gas Control Valve 19
- Gas Connections 20
- Pressure Testing 20
- Electrical Wiring 20-22

Troubleshooting 23-30
Repair Parts 31-35
Wiring Diagrams/External Control Interface 36-37
Warranty 38

SAFETY INSTRUCTIONS

FOR YOUR SAFETY - This product must be installed and serviced by a professional service technician, qualified in pool heater installation. Some jurisdictions require that installers be licensed. Check with your local building authority about contractor licensing requirements. Improper installation and/or operation could create carbon monoxide gas and flue gases which could cause serious injury or death. Improper installation and/or operation will void the warranty.

Installation must be in accordance with all local codes and/or the lastest edition of the National Fuel Gas Code, Z233.1 and the National Electrical Code, ANSI/NFPA70 (U.S.), or standards CAN/CGA B149 – INSTALLATION CODES FOR GAS-BURNING APPLIANCES AND EQUIPMENT and/or local codes and Standard CSA C22.1 – Canadian Electrical Code, Part 1 (Canada). The heater, when installed, must be electrically grounded and bonded in accordance with local codes, or, in absence of local codes, with the Canadian Electrical Code or the National Electrical Code, ANSI/NFPA70, as applicable.

SAFETY INSTRUCTIONS (Continued)

⚠WARNING This appliance is equipped with an unconventional gas control valve that is factory set with a manifold pressure of -.2 inches wc. Improper installation, adjustment, alteration, service or maintenance can cause property damage, personal injury or loss of life. Installation or service must be performed by a qualified installer, service agency or the gas supplier. If this control is replaced, it must be replaced with an identical control.

Do not attempt to adjust the gas flow by adjusting the regulator setting.

⚠WARNING Risk of fire or explosion from incorrect fuel use or faulty fuel conversion. Do not try to run a heater set up for natural gas on propane gas or vice versa. Only qualified service technicians should attempt to convert heater from one fuel to the other.

Do not attempt to alter the rated input or type of gas by changing the orifice. If it is necessary to convert to a different type of gas, consult your Sta-Rite dealer. Serious malfunction of the burner can occur which may result in loss of life. Any additions, changes, or conversions required in order for the appliance to satisfactorily meet the application needs must be made by a Sta-Rite dealer or other qualified agency using factory specified and approved parts.

The heater is available for use with natural gas. It can be converted to propane gas. Refer to the nameplate for the type of gas the heater is equipped to use.

- Use this heater only with natural gas. Do not attempt to convert it to another type of gas.
- If propane gas is the only available fuel, have a qualified service technician convert the heater to propane before putting heater into operation.

⚠WARNING Risk of fire or explosion from flammable vapors. Do not store gasoline, cleaning fluids, varnishes, paints, or other volatile flammable liquids near heater or in the same room with heater.

⚠WARNING Risk of fire, carbon monoxide poisoning, or asphyxiation if exhaust venting system leaks. Only qualified service technicians should attempt to service the heater, as leakage of exhaust products or flammable gas may result from incorrect servicing.

⚠WARNING Risk of explosion if unit is installed near propane gas storage. Propane (LP) gas is heavier than air. Consult local codes and fire protection authorities about specific installation requirements and restrictions. Locate the heater away from propane gas storage and filling equipment as specified by the Standard for the Storage and Handling of Liquified Petroleum Gases, CAN/CSA B149.2 (latest edition).

⚠WARNING Risk of asphyxiation if exhaust is not correctly vented. Follow venting instructions exactly when installing heater. Do not use a draft hood with this heater, as the exhaust is under pressure from the burner blower and a draft hood will allow exhaust fumes to blow into the room housing the heater.

The heater is supplied with an integral venting system for outdoor installation. A vent conversion kit (See Page 14 for Part Numbers for Conversion Kits) is available for installations in enclosures (Canada) or indoors (U.S.). Use the specified venting, and only the specified venting, when heater is installed in an enclosure or indoors. In Canada, this pool heater can only be installed outdoors or in an enclosure that is not normally occupied and does not directly communicate with occupied areas. See Page 11 for enclosure venting requirements.

⚠CAUTION Label all wires prior to disconnection when servicing controls. Wiring errors can cause improper and dangerous operation. Wiring errors can also destroy the control board.

Connect heater to 120 Volt, 60 Hz., 1 Phase power only.

Verify proper operation after servicing.

Do not allow children to play on or around heater or associated equipment.

Never allow children to use the pool or spa without adult supervision.

Read and follow other safety information contained in this manual prior to operating this pool heater.

GENERAL SPECIFICATIONS/ REQUIREMENTS

NOTICE: Combustion air contaminated by corrosive chemical fumes can damage the heater and will void the warranty.

NOTICE: The Combination Gas Control Valve on this appliance differs from most appliance gas controls. If it must be replaced, for safety reasons replace it only with an identical gas control.

NOTICE: The jacket covers must be in place to provide proper ventilation. Do not operate the heater for more than five (5) minutes with the jacket covers removed.

This heater is design certified by CSA International as complying with the Standard for Gas Fired Pool Heaters, ANSI Z21.56* CSA 4.7, and is intended for use in heating fresh water swimming pools or spas.

NOTICE: Do not use this heater as a heating boiler, water heater, or for heating salt-water pools. This heater is intended for use in heating fresh water swimming pools or spas only.

The heater requires an external 120 VAC single-phase electric power source.

The heater is design certified by CSA International for installation on combustible flooring. Specified minimum clearances must be maintained to combustible surfaces (see “Installation Instructions”, Pages 9 and 10).

The heater should be located in an area where leakage of the heater or connections will not result in damage to the area adjacent to the heater or to the structure. When such locations cannot be avoided, it is recommended that a suitable drain pan, adequately drained, be installed under the heater. The pan must not restrict air flow.

The heater may not be installed within five feet of the inside surface of a pool or spa unless it is separated by a solid fence, wall or other permanent barrier.

Propane (LPG) fired heaters must not be installed in Massachusetts, by order of the Massachusetts State Fire Marshall. For more information, call the Fire Marshall's office.

DESCRIPTION OF THE HEATER

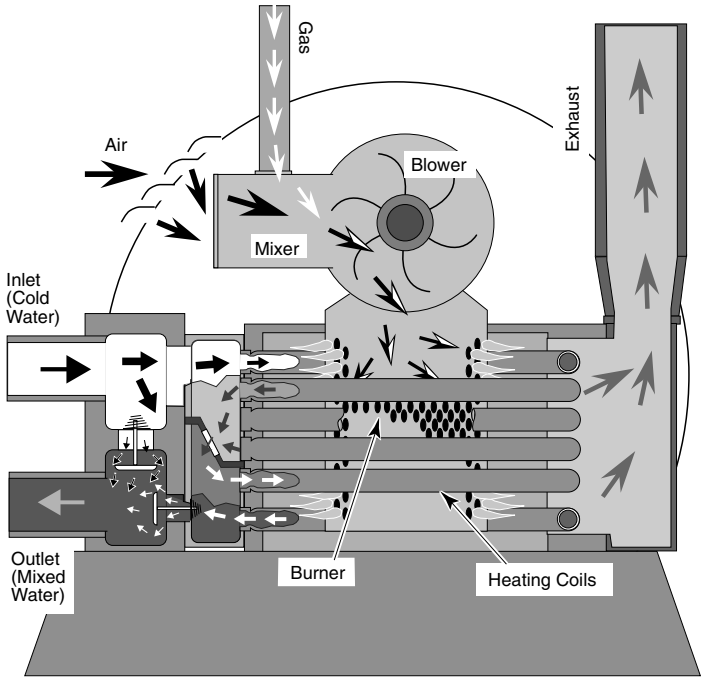

FIGURE 2

Figure 2 is a diagram of the heater showing how it operates.

Precisely matched orifice plates meter the air and gas into the mixer. The blower draws the air and gas through the mixer and forces it into the burner's flameholder. A sealed heat exchanger surrounds the flameholder, discharging exhaust gases out the flue.

Two inch PVC water piping connects directly to the manifold/header on the heat exchanger using 2" PVC slip unions provided with the heater. The outer manifold remains cool; no heat sinks are required. A thermal regulator and an internal bypass regulate the water flow through the heat exchanger to maintain the correct outlet temperature.

A plastic jacket with the top half split for access surrounds the assembly. The heater control board assembly, set into the top of the jacket, contains the operating controls.

SEQUENCE OF OPERATION

An electronic temperature sensing **thermistor** in the manifold adapter inlet controls the heater operation. When the inlet water temperature drops below the temperature set on the **operating control**, the **burner controller** supplies power to the combustion **air blower** through a series of **safety interlocks**. The interlocks consist of

- the **pressure switch (PS)**, which senses that the pump is running,
- the **high limit switch (HLS)**, which opens if the heat exchanger outlet temperature goes above 135°F (57°C), and
- the **automatic gas shutoff (AGS)** switch, which opens if the heat exchanger outlet temperature goes above 140°F (60°C).
- the **stack flue sensor (SFS)**, which shuts down the heater if the flue gas temperature reaches 500°F (260°C).

The **air flow switch (AFS)** senses the pressure drop across the air metering orifice. As soon as there is sufficient air flow, the AFS closes, closing the circuit to the **hot surface igniter (HSI)**, which ignites the fuel mixture.

On a call for heat, the blower and HSI are energized. In about 20 seconds, the gas valve opens and ignition occurs. The HSI then switches to a sensing mode and monitors the flame.

The heater is equipped with a digital operating control that enables the user to pre-set the desired pool and spa water temperatures. The control enables the user to select between pool and spa heating, and features a digital display that indicates the water temperature.

OWNER'S OPERATING INSTRUCTIONS

FOR YOUR SAFETY READ BEFORE OPERATING

⚠WARNING IF YOU DO NOT FOLLOW THESE INSTRUCTIONS EXACTLY, A FIRE OR EXPLOSION MAY RESULT, CAUSING PROPERTY DAMAGE, PERSONAL INJURY OR LOSS OF LIFE.

START-UP AND OPERATION

START-UP AND SHUTDOWN INSTRUCTIONS ARE ON THE LABEL ATTACHED TO THE COVER OF THE APPLIANCE CONTROL BOX.

BEFORE START-UP

A. This appliance does not have a pilot. It is equipped with an ignition device which automatically lights the burner. Do not try to light the burner by hand.

B. BEFORE OPERATING check for odor. Sniff all around the appliance area for gas. Be sure to sniff next to the floor, because some gas (such as propane) is heavier than air and will settle on the floor.

WHAT TO DO IF YOU SMELL GAS

- Do not try to light any appliance.
- Do not touch any electrical switch; do not use any phone in your building.
- Immediately call your gas supplier from a neighbor's phone. Follow the gas supplier's instructions.
- If you cannot reach your gas supplier, call the fire department.

C. Use only your hand to push in or turn the gas control knob. Never use tools. If the knob will not push in or turn by hand, don't try to repair it, call a qualified service technician. Force or attempted repair may result in fire or explosion.

D. Do not use this heater if any part has been under water. Immediately call a qualified service technician to inspect the heater and to replace any part of the control system and any gas control which has been under water.

E. Do not operate the pool heater unless the pool or spa is properly filled with water.

F. Before operating the appliance for the first time or after it has been off for an extended time, perform the following checklist:
   1. Remove debris or other articles from inside the heater and the area around the heater and its exhaust vent. Make sure the ventilation openings are clear of debris or obstruction. For installations in an enclosed space, make sure openings for combustion and ventilation air are unobstructed.
   2. Keep heater area clear and free from combustibles, flammable liquids and chemicals.
   3. Check that all water connections are tight.
   4. Water must be flowing through the heater during operation. Make sure that pool/spa is filled with water and have pump operating. Check that water flow is unobstructed from the appliance. When operating for the first time or after an extended shutdown, run filter pump for several minutes to clear all air from the system.

SPA TEMPERATURE CAUTION

All safety rules recommended by the U.S. Consumer Product Safety Commission should be observed when using a spa or hot tub, including:

1. Spa or hot tub water temperatures should never exceed 104°F (40°C). A temperature of 100°F (38°C) is considered safe for a healthy adult. Special caution is suggested for young children.
2. Drinking of alcoholic beverages before or during spa or hot tub use can cause drowsiness which could lead to unconsciousness and subsequently result in drowning.
3. Pregnant women beware! Soaking in water above 102°F (39°C) can cause fetal damage during the first three months of pregnancy (resulting in the birth of a brain-damaged or deformed child). Pregnant women should follow the 100°F (38°C) maximum rule.
4. Before entering the spa or hot tub, users should check the water temperature with an accurate thermometer; spa or hot tub thermostats may err in regulating water temperature.
5. Persons with medical history of heart disease, circulatory problems, diabetes or blood pressure problems should obtain their physician's advice before using spas or hot tubs.
6. Persons taking medications which induce drowsiness, such as tranquilizers, antihistamines or anticoagulants, should not use spas or hot tubs.

OPERATING INSTRUCTIONS

1. STOP! Read the safety information above.
2. Set both pool and spa thermostats to the lowest settings.
3. Turn off all electric power to the appliance.
4. This appliance does not have a pilot. It is equipped with an ignition device which automatically lights the burner. Do not try to light the burner by hand.
5. Remove the jacket cover(s) by unfastening the screws connecting both halves of the top jacket. See Figure 3.

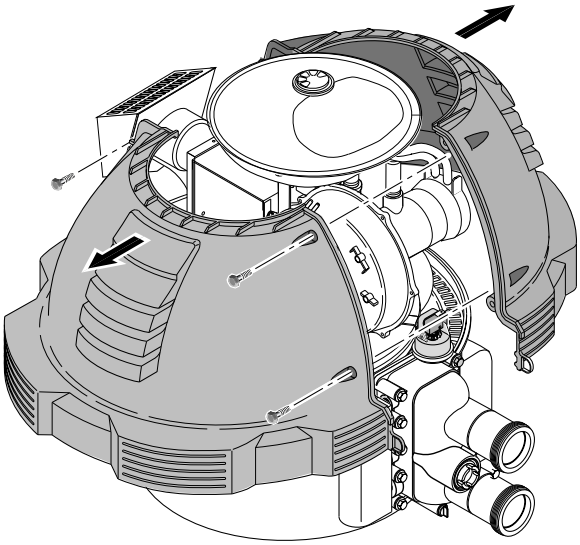

FIGURE 3: Removal of Jacket Covers

6. Turn the knob on the gas control clockwise (↷) to the black line, depress slightly, and turn to "OFF" position. See Figure 4.

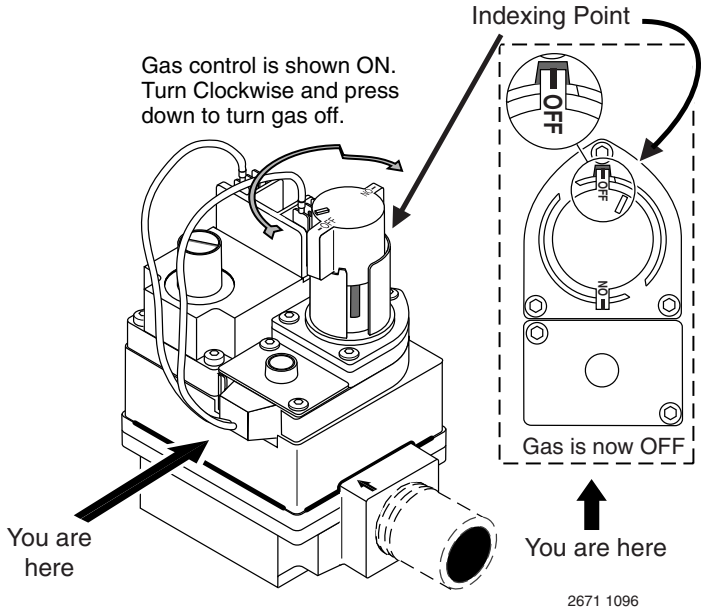

FIGURE 4: Turning Gas Control OFF

7. Wait five (5) minutes to clear out any gas. If you then smell gas, STOP! Follow "B" in the "Before Startup" instructions (Page 4). If you don't smell gas, go to the next step.
8. Turn the knob on the gas control counter-clockwise (↶) to the "ON" position. See Figure 5.

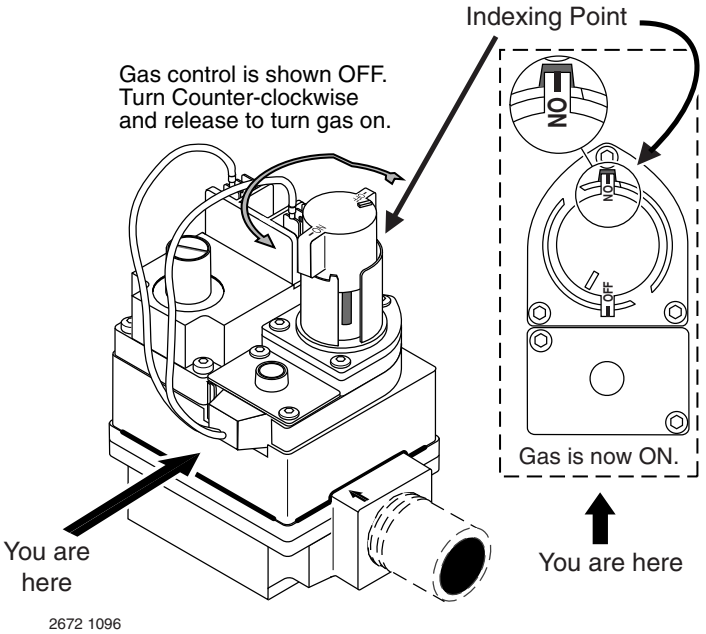

FIGURE 5: Turning Gas Control ON

9. Replace jacket cover(s). All jacket covers must be in place when operating the appliance.
10. Set 3-way valves on inlet and outlet to pool or spa, as appropriate.
11. Turn on all electric power to the appliance.
12. Press either the POOL ON or SPA ON button switches on the operating control.
13. Set the thermostat to desired setting (**NOTICE:** Set point must be above actual water temperature or burner will not fire). See OPERATING CONTROL below.
14. The blower should come on immediately, and after about 20 seconds, the burner should fire. When operating for the first time, the burner may not fire on the first try because of air in the gas line. If it does not fire at first, push the OFF switch, wait five minutes, and again push the POOL or SPA ON switch. The burner should fire after about 20 seconds. You may have to repeat this until all of the air has cleared the gas line.
15. The burner should fire until the pool/spa temperature reaches the desired temperature set on the thermostat. The blower will continue to run for about 45 seconds after the burner shuts off. If any of the safety interlocks should open during burner operation, the burner shuts off immediately, but the blower continues to run for about 45 seconds.
    Should overheating occur or the gas supply fail to shut off, turn off the manual gas control valve to the appliance.
16. If the appliance will not operate, follow the instructions "TO TURN OFF GAS TO THE APPLIANCE", and call your service technician or gas supplier.

TO TURN OFF GAS TO THE APPLIANCE

1. Depress OFF button on operating control.
2. Turn off all electric power to the unit.
3. Remove jacket cover(s). See Figure 3.

   ⚠ CAUTION HEATER PARTS MAY BE HOT.
4. Turn the knob on the gas control clockwise (↷) to the black line, depress slightly, and turn to "OFF" position. See Figure 4.
5. Replace jacket cover(s).

OPERATING CONTROL

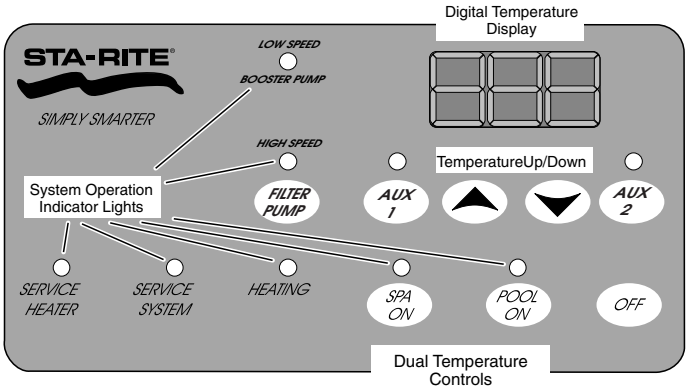

FIGURE 6: Operating Control. See Page 36 for External Control Interface.

The five operating switches are:

POOL ON Press this button to govern heater operation by the pool temperature setting.

SPA ON Press this button to govern heater operation by the spa temperature setting.

OFF Press this button to switch off the heater.

▲TEMP Press this button to raise the temperature setting.

▼TEMP Press this button to lower the temperature setting.

To toggle the display between degrees Centigrade (°C) and degrees Farenheit (°F):

1. Turn the Operating Control OFF.
2. Press ▲TEMP or ▼TEMP for 5 seconds. The display will flash once and change modes (°C to °F or vice versa).

When either the ▲TEMP or ▼TEMP buttons are depressed, the digital display will indicate the temperature setting. After five seconds, the display will return to the actual pool/spa temperature.

In addition to the digital temperature display, there are five indicator lights:

The **POOL ON** light indicates that the pool water temperature is governing operation of the heater.

The **SPA ON** light indicates that the spa water temperature is governing operation of the heater.

The **HEATING** light comes on and stays on when the burner is firing. This light should be on whenever the burner is on. It blinks when the heater is calling for heat but not firing. If this light is on but the burner fails to come on, one of the "service" lights should come on, indicating a fault in the system.

The **SERVICE SYSTEM** light indicates that there is insufficient water flow to the heater. If the pump is operating, this usually indicates that the filter and/or skimmers should be cleaned (some filters may require backwashing). If the light remains on after the filter/skimmers have been serviced, the system should be checked by a qualified service technician.

The **SERVICE HEATER** light indicates a fault in the heater or its controls. If this light comes on, shut down the heater (See TO TURN OFF GAS TO THE APPLIANCE, at left), and have a qualified service technician check the system.

⚠WARNING **Risk of explosion or fire causing burns or death if safety interlocks are disabled**. DO NOT attempt to operate heater when SERVICE HEATER light is on or if blower or burner will not start. Instead, follow instructions under "To Turn Off Gas to the Appliance", at left, and call a qualified service technician to repair unit.

AFTER START-UP

CHECKING WATER FLOW

⚠WARNING **Fire or flooding hazard.** If the unit overheats and the burner fails to shut off, follow instructions under "To Turn Off Gas to the Appliance", Page 6, and call a qualified service technician to repair unit.

After start-up, the outlet water pipe should feel slightly warmer than the inlet pipe. If it feels hot, or if you hear the water in the heater boiling, there may not be enough water flow to the appliance. Make sure that the filter is not plugged. If water temperature remains high but the unit continues to operate, turn off the appliance and call your service technician.

SPRING AND FALL OPERATION

If the pool is only used occasionally, lower the pool thermostat to 65°F (18°C). and leave the heater on. This will keep the pool and the surrounding ground warm enough so that the heater should restore the pool to a comfortable temperature within about one day.

COLD WEATHER OPERATION

The heater may be operated in the wintertime, provided air temperatures remain above freezing and the water temperature is not permitted to drop below 65°F (18°C). Extended heater operation with water temperatures below 65°F (10°C) can result in serious damage to the heater and is not covered by warranty.

NOTICE: When starting the heater for the swimming season with a water temperature below 50°F (10°C), the heater may be used to heat the water; however, make sure that the heater operates continuously until the water temperature reaches the heater's minimum setting of 65°F (18°C).

This unit shall not be operated outdoors at temperatures below those indicated here: 40°F (4°C).

During cold weather, if there is no danger of freezing, operate the filter pump continuously even if the heater is not operating. If air temperatures are expected to drop below freezing (32°F/0°C), shut down the heater and winterize it (See "WINTERIZING", Page 8). Allowing the heater to freeze will void the warranty.

MAINTAINING POOL TEMPERATURE

To maintain pool temperature, make sure that the heater switch and valving are reset to pool settings after using the spa.

ENERGY SAVING TIPS

1. Keep the pool or spa covered when not in use. This will reduce heating costs, reduce water evaporation, conserve chemicals and reduce load on the filtering system.
2. Reduce pool thermostat to 78°F (25°C) or lower; reduce spa temperature to 100°F (38°C).
3. Use a time clock to start the filter pump at 6 a.m. or later. The swimming pool loses less heat after daybreak.
4. For pools used only on weekends, lower the thermostat setting by 10°F to 15°F (5°C to 8°C) during the week to reduce heat loss. A properly sized heater will restore normal temperature within one day.
5. Turn the heater off when the pool will not be used for an extended period.
6. Follow a regular program of preventive maintenance for the heater each new swimming season. Check operation of the heater and its controls.

CARE AND MAINTENANCE

MAINTENANCE INSTRUCTIONS

⚠WARNING Risk of fire or explosion from flammable vapors. Do not store gasoline, cleaning fluids, varnishes, paints, or other volatile flammable liquids near heater or in the same room with heater.

The following maintenance is recommended every six months and at the start of every swimming season:

1. Inspect the jacket and venting system to make sure that there are no obstructions to the flow of ventilating air or burner exhaust. Check that room air intakes are open and clear of obstructions.
2. Keep the area in and around the heater clear and free from combustible materials, gasoline and other flammable vapors and corrosive liquids.
3. Test the operation of the pressure relief valve by lifting the valve lever.
4. Test for proper operation of the pressure switch. (See "SWITCH SETTINGS" for testing instructions).
5. On enclosed installations with high-temperature Special Gas Vent systems, repeat the Final Installation Check, Page 15. Check for evidence of joint leakage. Make sure that joints have not slipped partially or completely apart. Check pipe and fittings for cracks or breaks.

The combustion air blower is permanently lubricated, and does not require periodic lubrication. The burner does not require maintenance or adjustment by the user. Call a qualified service technician if you suspect that the burner may require maintenance.

WINTERIZING (See Figure 7)

For outdoor heaters in freezing climates, shut the heater down and drain it for winter as follows:

1. Turn off electrical supply to the heater and pump.
2. Close main gas control valve and manual gas valve (located outside the heater).
3. Open drain cock located on the bottom of the manifold adapter, and drain the heat exchanger and manifold adapter completely. If heater is below pool water level, be sure to close isolation valves to prevent draining the pool (isolation valves are not required and should not be used on heaters installed above pool water level). Assist the draining by blowing out the heat exchanger through the pressure switch fitting with low pressure compressed air (less than 5 PSI or 35 kPa).

⚠WARNING Explosion hazard. Purging the system with compressed air can cause components to explode, with risk of severe injury or death to anyone nearby. Use only a low pressure (below 5 PSI or 35 kPa), high volume blower when air purging the heater, pump, filter, or piping.

4. Remove the Water Pressure Switch. Plug the port in the manifold to prevent bugs and dirt from getting into the manifold.
5. Drain the plastic inlet/outlet manifold through the outlet pipe. If the pipe does not drain naturally to the pool, install a drain cock in the outlet pipe to drain the manifold.
6. Cover air inlet grate with a plastic bag to prevent bugs, leaves, etc., from getting into the heater.

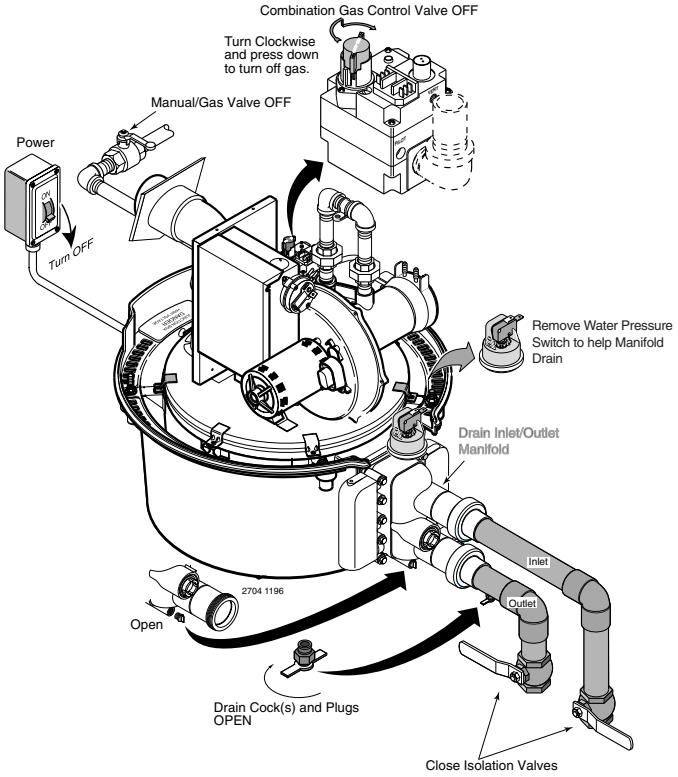

FIGURE 7: Winterizing

NOTICE: Water trapped in the heater can cause freeze damage. Allowing the heater to freeze voids the warranty.

To return the heater to service after winterizing:

1. Close drain cock and fittings.
2. Before starting the heater, circulate water through the heater for several minutes until all air noises stop. See also "BEFORE STARTUP" (Page 4) and "CARE AND MAINTENANCE" (above).

INSTALLATION INSTRUCTIONS

⚠WARNING Risk of fire, explosion, or asphyxiation if heater is improperly installed, adjusted, serviced or maintained.

These instructions are for licensed, certified, trained and experienced installers only. Be sure your installer or service technician holds all required licenses or certification for your area. Attempts by unqualified persons to service or repair this heater are dangerous and could be fatal.

PUTTING THE HEATER INTO SERVICE

If the heater is installed below the level of the pool, or more than two feet above pool level, the pressure switch setting should be adjusted. See PRESSURE SWITCH, in the MAINTENANCE section.

Before putting the heater into service for the first time, follow the instructions under BEFORE STARTUP in the front of this manual. Check for proper operation of the heater by following the steps under OPERATING INSTRUCTIONS.

Damage to equipment caused by improper installation or repair will void the warranty.

OUTDOOR INSTALLATION INSTRUCTIONS

For heaters located outdoors, using the built-in stackless venting system.

⚠WARNING Risk of explosion if a unit converted to propane gas is installed in a pit or other low spot. Propane is heavier than air. Do not install the heater using propane in pits or other locations where gas might collect. Consult your local building code officials to determine installation requirements of heater relative to propane storage tanks and filling equipment. Installation must meet the requirements of the Standard for the Storage and Handling of Liquid Petroleum Gases, ANSI/NFPA 58 (latest edition) in the U.S., or CAN/CSA B149.2 (latest edition) in Canada. Consult local codes and fire protection authorities about specific installation restrictions.

Locate the heater on a level surface in an open area that is protected from drainage or run-off. Install the heater in an area where leaves or other debris will not collect on or around the heater. Do not install the heater where water (including sprinklers or runoff) will fall directly onto the jacket.

HEATER CLEARANCES – OUTDOOR

The heater must be installed with the top of the vent at least 10 feet (3M) below, or to either side of, any opening into a building.

If the heater is located under a roof or deck overhang, there must be at least three feet (in the U.S.) or four feet (1.2M) (in Canada) clear space between the bottom of the overhang and the top of the heater exhaust vent. The heater must be at least six inches (15cm) from the nearest wall (clearance for service access will depend on the installation). If the heater is under a roof or deck overhang, the space around the heater must be open on three sides.

The heater is certified for installation on combustible flooring.

The following clearances must be maintained from combustible surfaces:

TOP.....3 FEET (U.S.)
.....4 FEET (1.2M) (Canada)
ALL SIDES.....6 INCHES (15cm)

Orient the heater for convenient access to the water connections and the gas and electrical connections.

Install the heater at least 18 inches (45cm) from any property line.

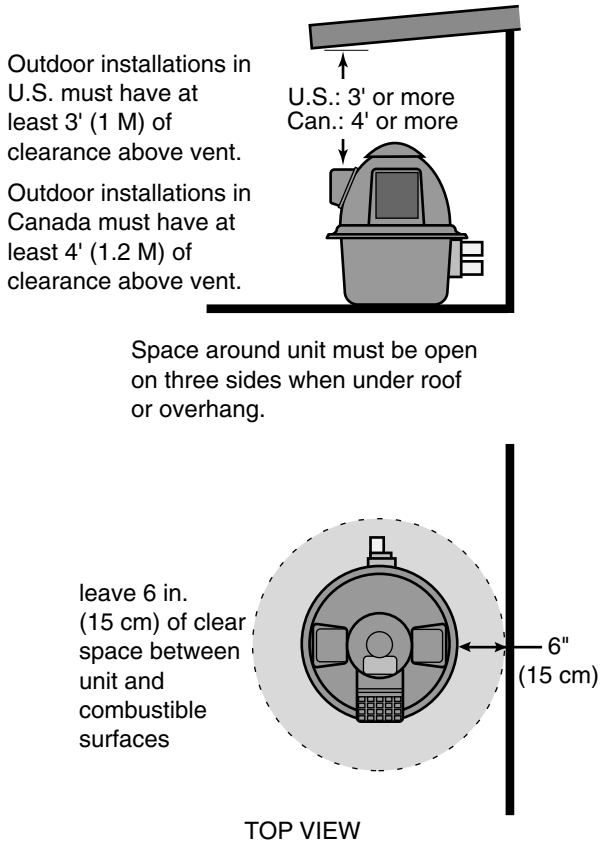

FIGURE 8: Combustible clearances

CONTROL PANEL INDEXING

The exhaust discharges vertically from outside the vent cover. The heater control panel assembly on top of the jacket can be turned to any of six positions for convenient access to the panel as follows:

1. Unbolt and separate the jacket halves.
2. Pull hair pin clips.
3. Depress plastic clips on the control panel assembly.
4. Lift panel off of support plate.
5. Turn the assembly to the desired position and snap in place.
6. Make sure that the operating controls can be adjusted without having to lean over the exhaust vent.
7. Replace hair pin clips.
8. Replace jacket halves and bolts and tighten.

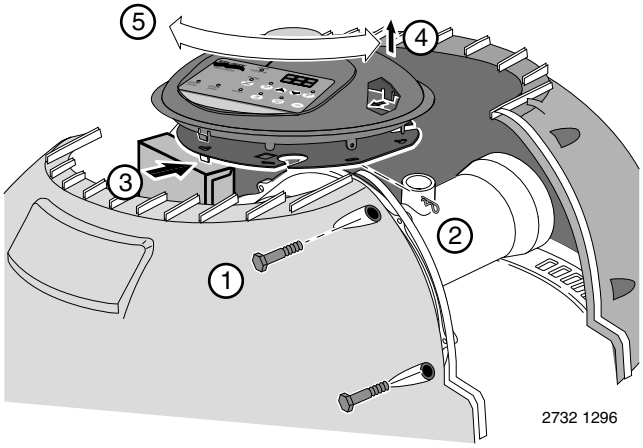

FIGURE 9: Indexing Control Panel

OUTDOOR SHELTER INSTALLATION INSTRUCTIONS

This pool heater can only be installed outdoors or in an enclosure that is not normally occupied and does not directly communicate with occupied areas.

⚠WARNING Risk of asphyxiation if exhaust is not correctly vented. Follow venting instructions exactly when installing heater. Do not use a draft hood with this heater, as the exhaust is under pressure from the burner blower and a draft hood will allow exhaust fumes to blow into the room housing the heater. Exhaust venting to the outdoors is required for all outdoor shelter installations.

⚠WARNING Risk of explosion if a unit converted to propane gas is installed in a pit or other low spot. Propane is heavier than air. Do not install the heater using propane in pits or other locations where gas might collect. Consult your local building code officials to determine installation requirements of heater relative to propane storage tanks and filling equipment. Installation must meet the requirements for the Standard for the Storage and Handling of Liquified Petroleum Gases, CAN/CSA B149.2 (latest edition). Consult local codes and fire protection authorities about specific installation restrictions.

The heater is certified by CSA International for installation on combustible flooring; in alcoves; basements; in closet or utility rooms (in the U.S.)

INSTALLATION IN A GARAGE OR UTILITY ROOM (In Canada, this must be not normally occupied and must not directly communicate with occupied areas.)

⚠WARNING Risk of fire and explosion if installed at floor level in an automotive garage or near gasoline or flammable liquid storage. Gasoline fumes are heavier than air and will settle to floor level in closed spaces. Gasoline fumes and spilled gasoline or other volatile liquids (such as some paints and varnishes) will travel across the floor and can be ignited by a gas appliance. In a utility room or residential garage installation, install the heater with the base at least 18 inches (.5M) above the floor. In a garage, install a rail or wall to protect the heater from physical damage by a moving vehicle.

Provide an adequate ventilation air supply (See Table 2, Page 11). Choose a location that will avoid contamination by chemical fumes.

NOTICE: PROPANE (LPG) fired heaters must not be installed in garages in Massachusetts, by order of the Massachusetts State Fire Marshall. For more information, call the State Fire Marshall's office.

NOTICE: Combustion air contaminated by corrosive chemical fumes can damage the heater and will void the warranty (See Table 1, Page 11).

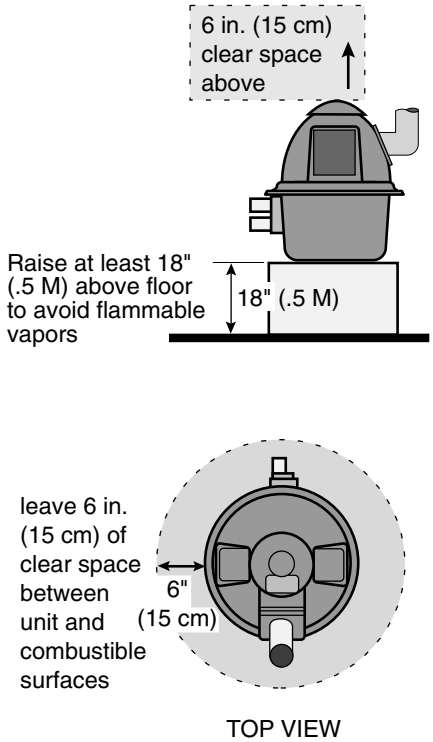

FIGURE 10: Minimum outdoor shelter clearances (Canada) or minimum garage or utility room clearances (U.S.)

HEATER CLEARANCES – OUTDOOR SHELTER (Canada) or INDOOR (U.S.)

The following clearances must be maintained from combustible surfaces:

TOP .....6 INCHES (15cm)
ALL SIDES.....6 INCHES (15cm)
VENT .....6 INCHES (15cm)

The heater is design certified by CSA International for installation on combustible flooring. For installation on carpeting, the heater must be mounted on a metal or wood panel that extends at least three inches (10cm) beyond the base of the heater. If the heater is installed in a closet or alcove, the entire floor shall be covered by the panel.

On an outdoor shelter installation, the exhaust discharges into a vent pipe. Orient the heater so that the vent pipe does not interfere with adjustment of the operating controls. The operating control panel located on top of the jacket can be rotated for convenient access to the control panel.

Table 1: Corrosive Vapors and Possible Causes

Area	Likely Contaminants
Chlorinated swimming pools and spas	Pool or spa cleaning chemicals. Acids, such as hydrochloric or muriatic acid
New construction and remodeling areas	Glues and cements, construction adhesives, paints, varnishes, and paint and varnish strippers. Waxes and cleaners containing calcium or sodium chloride
Beauty parlors	Permanent wave solutions, bleaches, aerosol cans containing chlorocarbons or fluorocarbons
Refrigeration plants or various industrial finishing and processing plants	Refrigerants, acids, glues and cements, construction adhesives
Dry cleaning and laundry areas	Bleaches, detergents, or laundry soaps containing chlorine. Waxes and cleaners containing chlorine, calcium or sodium chloride

COMBUSTION AND VENTILATION AIR SUPPLY

For shelter installation, the heater requires air supply openings for ventilation and combustion. The minimum requirements are for two (2) openings: one 12 inches (300cm) from the ceiling for ventilation air and one 12 inches (300cm) from the floor for combustion air, in accordance with the latest edition of ANSI Z223.1, or the National Fuel Gas code, the CAN/CGA-B149 Installation Codes, as applicable, and any local codes that may apply.

The minimum net free area in square inches shall be as follows:

Table 2: Combustion and Ventilation Air Requirements

Model	All Air From Inside Building		All Air From Outside Building	
	Combustion	Vent	Combustion	Vent
200	200 sq. in. 1,291 sq. cm.	200 sq. in. 1,291 sq. cm.	50 sq. in. 323 sq. cm.	50 sq. in. 323 sq. cm.
333	333 sq. in. 2,149 sq. cm.	333 sq. in. 2,149 sq. cm.	84 sq. in. 542 sq. cm.	84 sq. in. 542 sq. cm.
400	400 sq. in. 2,581 sq. cm.	400 sq. in. 2,581 sq. cm.	100 sq. in. 645 sq. cm.	100 sq. in. 645 sq. cm.

OUTDOOR SHELTER VENT INSTALLATION (Canada) or INDOOR INSTALLATION (U.S.)

Always vent the heater to the outdoors.

- Vent it horizontally or vertically using a Special Gas Vent, (see Table 4, Page 14), or
- Vent it vertically using Type "B" double wall vent connector pipe.

Locate the heater so as to minimize the length of horizontal venting and the number of vent elbows required. Horizontal vent runs must slope up 1/4" per foot (2cm/M) from the heater to allow exhaust condensate to drain and must have a condensate drain as described in the venting installation instructions.

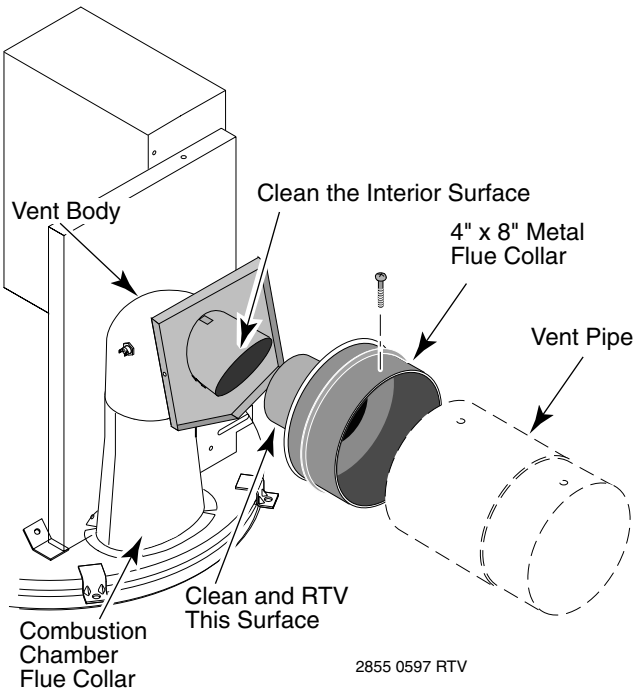

FIGURE 11: Flue Collar

OUTSIDE VENT COVER REMOVAL

The heater is supplied from the factory with a built-in stackless outside vent for outdoor installation. Remove the outside vent cover for outdoor shelter installation.

VERTICAL VENTING - NEGATIVE PRESSURE

(See Figures 11 and 12)

Vent the heater vertically in a negative pressure (positive draft) system in accordance with the CAN/CGA-B149 Installation Codes, and local codes. Type "B" Double-wall vent connector is recommended; however single-wall pipe is allowed by the National Fuel Gas Code in some circumstances. Consult your local code official for detailed information. **Do not** use a draft hood with this heater.

To connect a negative pressure metal gas vent to the heater, order the appropriate Metal Flue Collar from the chart below:

Metal Flue Collar	Sta-Rite Part No.
4x6"	77707-0076
4x8"	77707-0077

1. See Table 3, below, to determine allowable vent sizes for your heater.

NOTICE: Table 3 is for installations in which the total lateral vent length (that is, the horizontal distance from the flue collar to the main vertical portion of the vent) is less than 1/2 the total vent height (the vertical distance from the flue collar to the vent termination) and which have three or less elbows in the system. For venting systems which do not meet these conditions, consult the National Fuel Gas Code, ANSI Z223.1 (U.S.), or the standards CAN/CGA B149.1 and B149.2 (Canada).

2. Install the metal Flue Collar in the Vent Body of the heater (located under the outside vent cover). Fasten the metal Flue Collar to the Vent Body with two #10 sheet metal screws. Use UltraCopper® silicone RTV to seal the Flue Collar to the Vent Body. Before connecting the metal Flue Collar to the Vent Body, wet a clean cloth or paper towel with isopropyl alcohol (rubbing alcohol) and vigorously wipe the socket of the Vent Body. Immediately wipe the cleaned surfaces dry with a clean cloth or paper towel. Repeat for the exterior of the 4" end of the metal Flue Collar. Attach the metal Flue Collar to the Vent Body using the RTV supplied with the kit, following the vent manufacturer's instructions (included with kit). **Do not** use a draft hood with this heater.
3. Attach the vent pipe to the metal Flue Collar with sheet-metal screws.

⚠WARNING Risk of fire or asphyxiation if vent is not assembled according to manufacturer's instructions or if vent parts from different manufacturers are mixed. Vent parts from different manufacturers ARE NOT interchangeable. Mixing parts from more than one manufacturer may cause leaks or damage to vent. When assembling a vent, pick one manufacturer and be sure that all vent parts come from that manufacturer and are specified by the manufacturer for your system. Follow manufacturer's instructions, local code requirements, National Fuel Gas Code requirements (U.S.) or standards CAN/CGA B149.1 and B149.2 (Canada) carefully during assembly and installation.

4. Install vent pipe so that it can expand and contract freely as the temperature changes. Support the vent pipe according to applicable codes and the vent manufacturer's instructions. Pipe support must allow the vent pipe free movement out and back, from side to side, or up and down as necessary, without putting a strain on the heater or vent body. Slope horizontal pipe runs up from the heater at least 1/4" per foot (2cm per meter). Install Listed condensate drains at low points where condensate might collect. Plumb condensate drains to a drain through hard piping or high-temperature tubing such as silicone rubber or EPDM rubber – do not use vinyl or other low temperature tubing. Follow drain manufacturer's installation instructions.

Table 3: Permitted Minimum and Maximum Vent Heights By Size and Heater Model

Read "VERTICAL VENTING – NEGATIVE PRESSURE" (above) before using this table.

Type B Double Wall Vent With Type B Double Wall Connector In Feet (Meters)						
	Model 200		Model 333		Model 400	
Vent Size	Min. Height	Max. Height	Min. Height	Max. Height	Min. Height	Max. Height
6 in.	6 Ft. (1.8)	100 Ft. (30.5)	30 Ft. (9)	100 Ft. (30.5)	Not Rec.	Not Rec.
7 in.	6 Ft. (1.8)	100 Ft. (30.5)	10 Ft. (3)	100 Ft. (30.5)	15 Ft. (4.6)	100 Ft. (30.5)
8 in.	6 Ft. (1.8)	100 Ft. (30.5)	6 Ft. (1.8)	100 Ft. (30.5)	8 Ft. (2.4)	100 Ft. (30.5)
9 and 10 in.	6 Ft. (1.8)	50 Ft. (15.3)	6 Ft. (1.8)	100 Ft. (30.5)	6 Ft. (1.8)	100 Ft. (30.5)

Type B Double Wall Vent With Single Wall Connector In Feet (Meters)						
	Model 200		Model 333		Model 400	
Vent Size	Min. Height	Max. Height	Min. Height	Max. Height	Min. Height	Max. Height
6 in.	6 Ft. (1.8)	15 Ft. (4.6)	Not Rec.	Not Rec.	Not Rec.	Not Rec.
7 in.	6 Ft. (1.8)	8 Ft. (2.4)	10 Ft. (3)	20 Ft. (6)	15 Ft. (4.6)	50 Ft. (15.3)
8 in.	Not Rec.	Not Rec.	6 Ft. (1.8)	20 Ft. (6)	8 Ft. (2.4)	20 Ft. (6)
9 in.	Not Rec.	Not Rec.	Not Rec.	Not Rec.	6 Ft. (1.8)	6 Ft. (1.8)
10 in.	Not Rec.	Not Rec.	Not Rec.	Not Rec.	Not Rec.	Not Rec.

5. Use Listed firestops for floor and ceiling penetrations. Use Listed thimble for wall penetrations. Use a Listed roof flashing, roof jack, or roof thimble for all roof penetrations. Do not fill the space around the vent (that is, the clear air space in the thimble or firestop) with insulation. The roof opening must be located so that the vent is vertical.
6. Do not run the heater vent into a common vent with any other appliance.
7. **⚠WARNING Fire Hazard. Do not vent the heater directly into a masonry chimney.** Installation into a masonry chimney must use a chimney liner and must meet CAN/CGA-B149 Installation Codes requirements and all local code requirements.

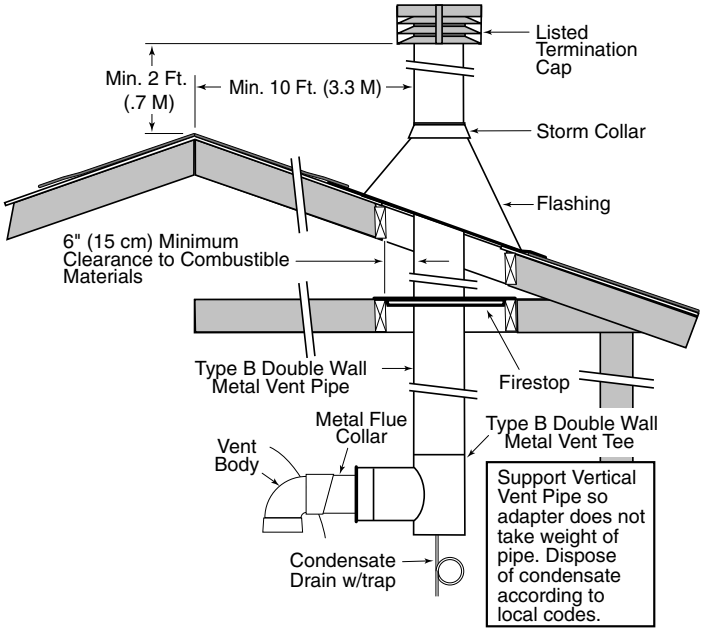

FIGURE 12A: Typical Metal Vent Pipe Installation-Canada (Vertical – Negative Pressure)

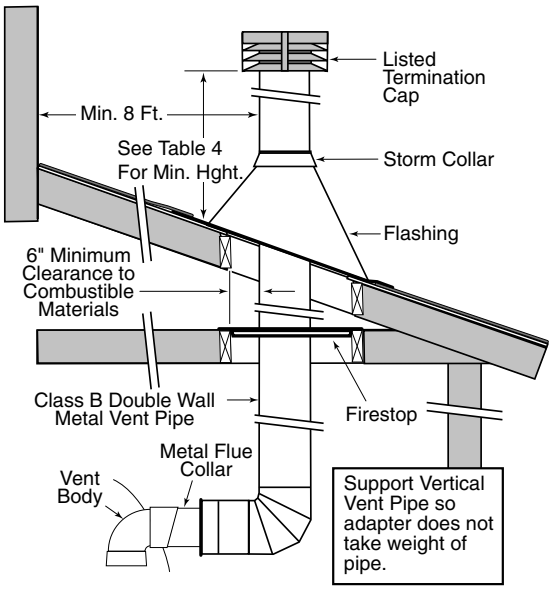

FIGURE 12B: Typical Metal Vent Pipe installation-U.S. (Vertical – Negative Pressure)

HORIZONTAL OR VERTICAL VENTING - POSITIVE PRESSURE (See Figure 13)

Vent the heater either horizontally or vertically using one of the 4-inch Special Gas Vent Pipes listed on Page 14 (Table 5). Install the vent pipe in accordance with local codes and the provisions of the National Fuel Gas Code, ANSI Z223.1 (U.S.), or the standards CAN/CGA B149.1 and B149.2 (Canada), and the vent manufacturer's instructions. **Do not** use a draft hood with this heater. Use one of the special gas vents specified in Table 5 (Page 14) for positive-pressure venting of this heater – do not use any other vent with it. Install the vent according to the vent manufacturer's detailed instructions.

Maintain clearance between the vent pipe and combustible surfaces according to the vent manufacturer's instructions and code requirements. Do not place any insulating materials around the vent or inside the required clear air space surrounding the vent. See Table 6 (Page 15) for maximum permissable vent lengths. See Table 7 (Page 15) for Listed vent components.

CONNECTING SPECIAL GAS VENT TO THE HEATER

Metallic:

1. Order an Appliance Adapter kit:
   Sta-Rite Part No. 77707-0086 for Saf-T Vent® or Saf-T Vent® CI.
   Sta-Rite Part No. 77707-0087 for Z-Vent.
2. Remove the outside vent cover.
3. Install the Appliance Adapter in the Vent Body of the heater (located under the outside Vent Cover). Before connecting the Appliance Adapter to the Vent Body, wet a clean cloth or paper towel with isopropyl alcohol (rubbing alcohol) and vigorously wipe the socket of the Vent Body. Immediately wipe the cleaned surfaces dry with a clean cloth or paper towel. Repeat for the exterior of the heater end of the Appliance Adapter. Attach the appliance adapter to the vent body using the adhesive specified by the vent manufacturer, following the vent manufacturer's instructions.

⚠WARNING Risk of carbon monoxide poisoning if adapter is improperly attached. Mechanical connections (such as screws) can cause cracking and leaks in the adapter. Do not drill holes or use screws to connect the appliance adapter to the heater vent body. Attach with manufacturer's specified adhesive.

Table 4: Vent Termination Height vs. Roof Pitch – U.S.

Roof Pitch	Minimum Height Above Roof*
Flat to 6/12	1 Ft.
6/12 to 7/12	1 Ft. 3 in.
>7/12 to 8/12	1 Ft. 6 in.
>8/12 to 9/12	2 Ft.
>9/12 to 10/12	2 Ft. 6 in.
>10/12 to 11/12	3 Ft. 4 in.
>11/12 to 12/12	4 Ft.
>12/12 to 14/12	5 Ft.
>14/12 to 16/12	6 Ft.
>16/12 to 18/12	7 Ft.
>18/12 to 20/12	7 Ft. 6 in.
>20/12 to 21/12	8 Ft.

* Vent must be at least eight (8) feet away from nearest vertical surface. Vents extending five (5) feet or more above the roof must be braced or guyed. Consult your local code officials for detailed information.

⚠WARNING Risk of fire or asphyxiation if vent is not assembled according to manufacturer's instructions or if vent parts from different manufacturers are mixed. Vent parts from different manufacturers ARE NOT interchangeable. Mixing parts from more than one manufacturer may cause leaks or damage to vent. When installing a vent, pick one manufacturer and be sure that all vent parts come from that manufacturer and are specified by the manufacturer for your system. Follow manufacturer's instructions and local and National Fuel Gas Code (U.S.) or CAN/CGA-B149 Installation Codes (Canada) requirements carefully during assembly and installation.

4. Install vent pipe so that it can expand and contract freely as the temperature changes. Support the vent pipe according to applicable codes and vent manufacturer's instructions. Pipe support must allow the vent pipe free movement out and back, from side to side, or up and down as necessary, without putting a strain on the heater or vent body. Slope horizontal pipe runs up from the heater at least 1/4″ per foot (2cm/M). Install Listed condensate drains at low points where condensate might collect. Plumb condensate drains to a drain through hard piping or high-temperature tubing such as silicone rubber or EPDM rubber – do not use vinyl or other low temperature tubing. Follow drain manufacturer's installation instructions.
5. Use Listed firestops for floor and ceiling penetrations. Use Listed thimble for wall penetrations. Use a Listed roof flashing, roof jack, or roof thimble for all roof penetrations. Do not fill the space around the vent (that is, the clear air space in the thimble or firestop) with insulation. The roof opening must be located so that the vent is vertical.
6. Vent Termination – Vertical (See Figures 12A and 12B, Page 13, for height of vent termination above the roof. See Table 7, Page 15, for Listed terminations.) Use a Listed vent terminal specified by local and national codes and your manufacturer's instructions. A roof termination must be vertical. In Canada, the Vent Cap location shall have a minimum clearance of 4 feet (1.2M) horizontally from electric meters, gas meters, regulators, and relief openings.
7. Vent Termination – Horizontal (See Table 7). Use a listed wall thimble and vent terminal from Table 7.

The terminal must be located (U.S.-See Figure 13):

- at least 3″ and at most 12″ out from the wall (see Figure 14), following the vent manufacturer's instructions.
- at least 12″ above finished grade or the normally expected snow accumulation level, whichever is higher
- at least 4 feet below or horizontally from, or 1 foot above, any doors or windows or gravity air inlet to a building
- At least 3 feet above any forced air inlet located within 10 feet
- At least 4 feet horizontally from electric meters, gas meters, regulators and relief equipment
- At least 7 feet above grade adjacent to walkways or similar traffic areas.

Table 5: Recommended Special Gas Vents (Positive Pressure)

Brand	Manufacturer	Material Type	Sealant
Saf-T Vent® 4" Special Gas Vent (Single Wall)	Heat-Fab, Inc. 38 Hayward Street Greenfield, MA 01301 (800) 772-0739	Metal	Consult Manufacturer
Saf-T CI Vent® Special Gas Vent (Double Wall)	Heat-Fab, Inc. 38 Hayward Street Greenfield, MA 01301 (800) 772-0739	Metal	Consult Manufacturer
Z-Vent 4" Special Gas Vent (Type BH), Model SVE	Z-Flex U.S., Inc. 20 Commerce Park North Bedrford, NH 03110-6911 (800) 654-5600	Metal	G.E. RTV 106

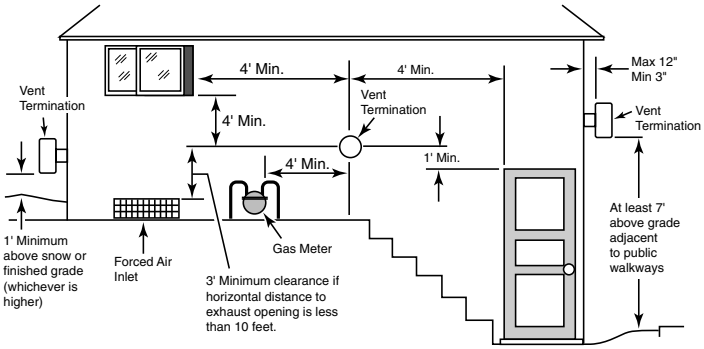

FIGURE 13: U.S. minimum Exhaust Vent clearances. Local codes may differ - consult local code officials.

The terminal must be located (Canada):

- at least 10 feet (3.3M) from any opening into a building.
- at least 12″ (.3M) above finished grade or the normally expected snow accumulation level, whichever is higher
- At least 4 feet (1.2M) horizontally from electric meters, gas meters, regulators and relief equipment
- At least 7 feet (2.1M) above grade adjacent to walkways or similar traffic areas.

Allow at least 3 feet (U.S.) or 4 feet (1.2M) (Canada) vertical clearance over vent termination when terminating under an overhang or deck.

Avoid corners or alcoves where snow or wind could have an effect. Exhaust may affect shrubbery and some building materials. Keep shrubbery away from termination. To prevent staining or deterioration, sealing or shielding exposed surfaces may be required.

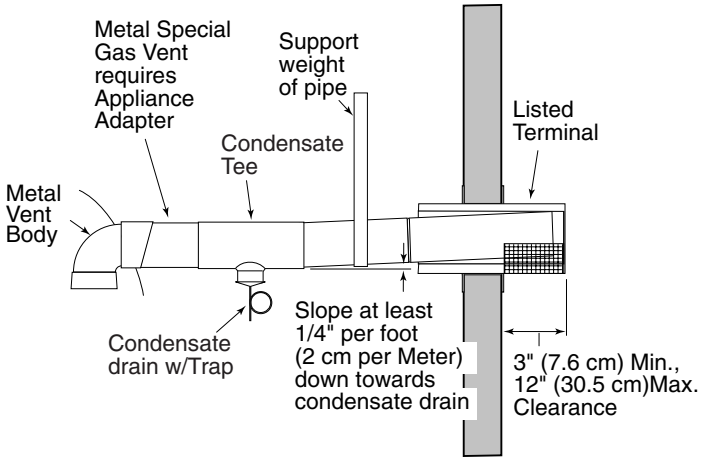

FIGURE 14: Typical Special Gas Vent Pipe Installation (Horizontal-Positive Pressure)

8. **WARNING Fire Hazard. Do not run the heater vent into a common vent with any other appliance.** Do not run the Special Gas Vent into, through, or within any active vent such as a factory built or masonry chimney.

Table 6: Maximum Vent Length

4” Special Gas Vent (Vertical or Horizontal)*	
No. of 90° Elbows	**Maximum Length**
0	50 Ft.
2	40 Ft.
4	30 Ft.
6	20 Ft.

* Minimum vent length is one foot (.34M), or in accordance with vent manufacturer’s instructions, and local and national codes.

Horizontal vents 3’ (1M) or less in length do not require a condensate tee, but must slope down toward the outlet at 1/4” to the foot (2cm/M) to allow condensate to drain.

Final Installation Check:

Check that horizontal vent pipe runs slope uniformly at least 1/4″ per foot (2cm per meter) to condensate drain(s). No sags, no dips, no high or low spots.

Check that vent is supported at elbows, tees, and horizontal and vertical runs according to manufacturer’s instructions and code requirements.

Check that vent supports and wall and ceiling penetrations allow free movements up, down, and sideways without putting any strains on the heater or vent body.

Check for at least six inch (15cm) free air clearance between the heater vent pipe and combustible materials.

Check that all joints are completely together and sealed.

WATER CONNECTIONS

The heater requires proper water flow and pressure for its operation. See Figures 15 and 16 for the recommended installation. The filter pump discharges to the filter, the filter discharges to the heater, and the heater discharges directly to the pool or spa.

Table 7: Listed Thimbles and Vent Terminals (for Special Gas Vents)

Vent Brand	Wall Thimble	Horizontal Terminal	Vertical Terminal
Saf-T Vent®	(Part of Vent term.)	5490CI Horizontal Term.	5400 Cap
Saf-T CI Vent®	(Part of Vent term.)	5490CI Horizontal Term.	5400 Cap
Z-Vent	2SVSWTF04	2SVSTTF04 Tee	2SVSRCF04 Cap

A manual bypass valve should be installed across the heater when the pump flow exceeds 120 GPM (454 LPM). See instructions below for setting of the manual bypass.

Make sure that the outlet plumbing from the heater contains no shut-off valves or other flow restrictions that could prevent flow through the heater (except as noted below). To switch flow between the pool and spa, use a diverter valve. Do not use any valve that can shut off the flow.

Do not use a shut-off valve to isolate the heater unless it is below the level of the pool or spa.

Install a check valve if there is a possibility of back-siphoning through the heater when the pump is off.

NOTICE: Improper operation of chemical feeders can cause severe damage to the heater which is not covered by the warranty. Either equip chemical feeders with an anti-siphon device to prevent chemicals from siphoning into the heater if the pump shuts off, or install the chemical feeder downstream of the heater (see "Water Chemistry," Page 17).

NOTICE: If the heater is plumbed in backwards, it will cycle continuously. Make sure piping from filter is not reversed when installing heater.

WATER PIPING

Connect the heater directly to 2" PVC pipe, using the integral unions provided. Heat sinks are not required. The low thermal mass of the heater will prevent overheating of the piping connected to the pump even if the heater shuts down unexpectedly.

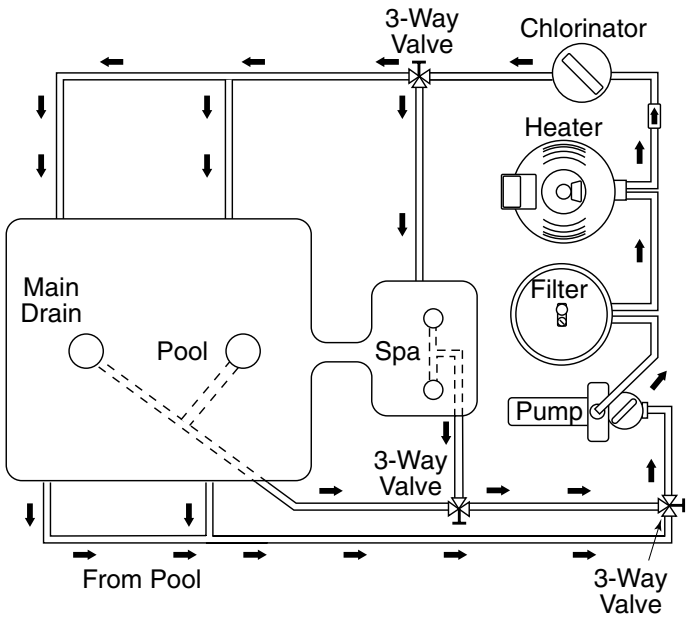

FIGURE 16: Typical pool piping layout

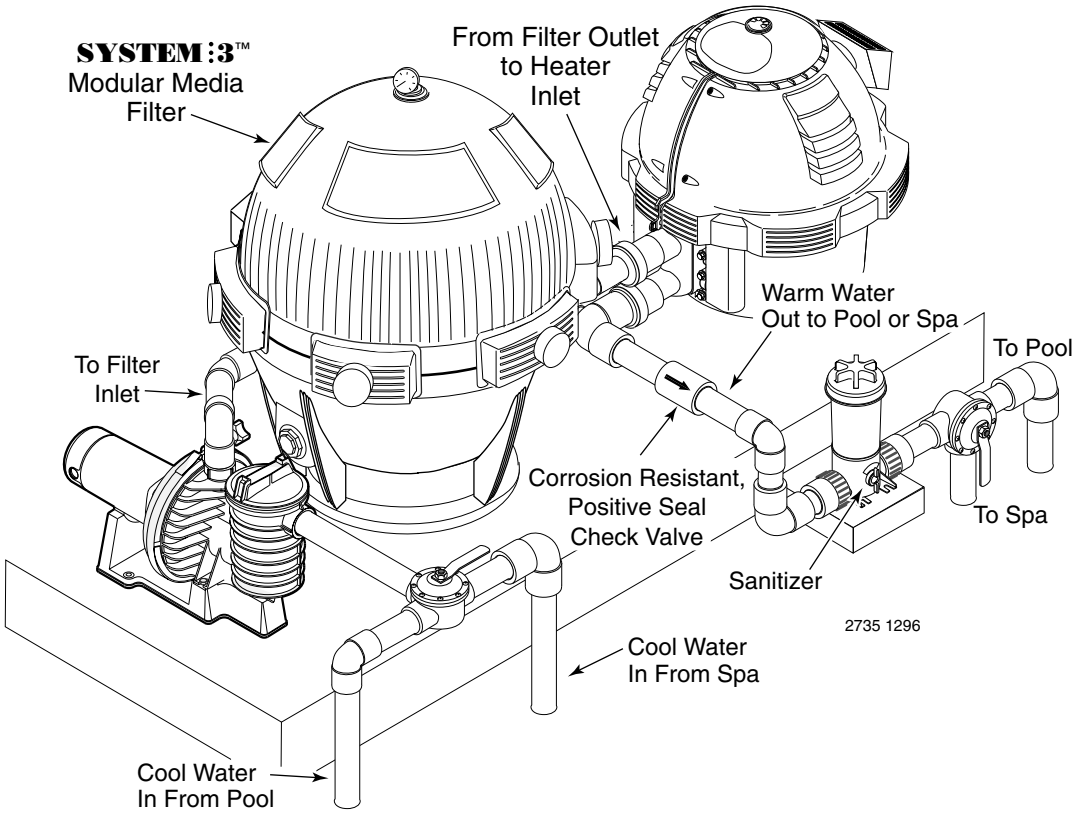

FIGURE 15: Typical installation

WATER FLOW RATE

Maximum and minimum water flow rates required by the heater are listed below:

Table 8: Maximum and Minimum Flow Rate in GPM (LPM)

Model	Minimum Flow	Maximum Flow
200	20 (76)	120 (454)
333	33 (125)	120 (454)
400	40 (152)	120 (454)

If the water flow rate to the heater is above 120 GPM (454 LPM), it must be reduced by installing a manual bypass valve (Figure 17). After installing the valve, adjust the valve to bring the flow rate within the acceptable range. Then remove the valve handle or lock it in place to prevent tampering.

Occasionally a two-speed pump will not develop enough pressure on the low speed to operate the heater. In this case, run the pump at high speed only to operate the heater. If this does not solve the problem, do not try to run the heater. Instead, correct the installation.

Do not operate the heater while an automatic pool cleaner is also operating. If the circulation pump suction is plugged (for example by leaves), there may not be adequate flow to the heater. Do not rely on the pressure switch in this case.

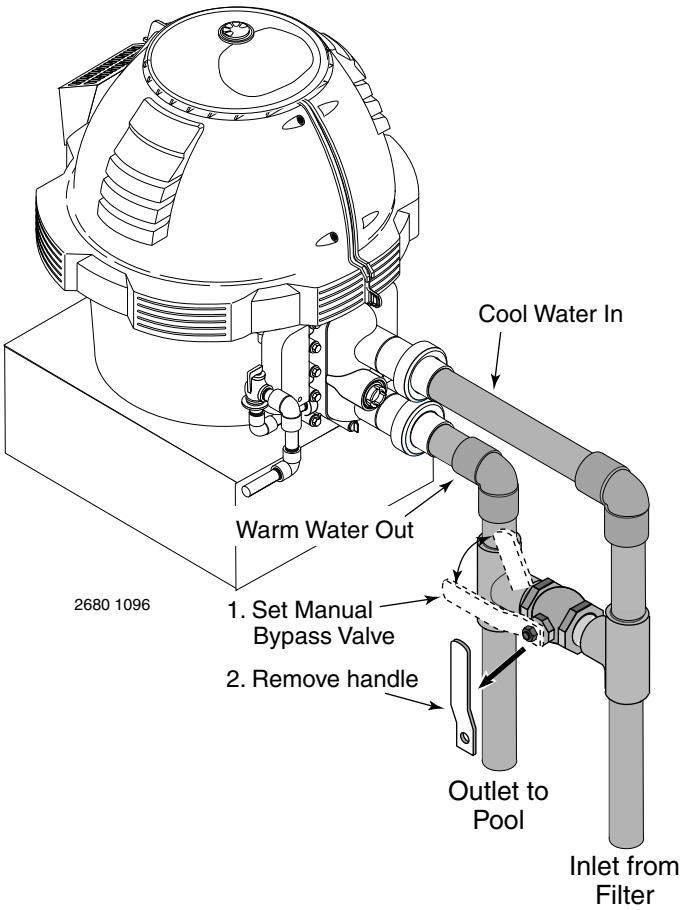

FIGURE 17: Manual bypass valve

WATER CHEMISTRY

Water chemistry should follow good swimming pool water chemistry practices. See Table 9 (below) for water chemistry parameters.

When using a chlorinator, install it downstream from the heater and at a lower level than the heater outlet. Install a corrosion resistant positive seal check valve (see Figure 15) between the heater and the chlorinator to prevent concentrated chemicals from back-siphoning into the heater. Back-siphoning is most likely to occur when the pump stops, creating a pressure-suction differential.

Table 9: Water Chemistry Parameters

Disinfectant levels	**Minimum**	**Ideal**	**Maximum**
Free Chlorine, ppm	1.0	2.0-4.0	10.0
Combined Chlorine, ppm	None	None	0.2
Bromine, ppm	2.0	4-6	10.0
Other Sanitizers	Levels not established. Consult local health department before use.		
Chemical Values			
pH	7.2	7.4-7.6	7.8
Total Alklinity (Buffering), ppm as $CaCO_3$	60	80-100	180
Total Dissolved Solids, ppm	N/A	N/A	1,500 ppm > TDS at startup*
Calcium Hardness, ppm, as $CaCO_3$	150	200-400	500-1,000
Heavy Metals	None	None	None
Biological Values			
Algae	None	None	None
Bacteria	None	None	Refer to Local Code

NOTICE: Failure to adhere to the listed water chemistry parameters may result in premature failure of the heat exchanger and will void the warranty.

*Start-up TDS includes source water TDS and any other inorganic salt added at start-up.

WATER PRESSURE SWITCH

⚠WARNING Hazardous pressure. Do not bypass the Water Pressure Switch or render it inoperable.

Switch Settings

The water pressure switch turns off the burner if the water flow is interrupted. If the water flow is restricted, the water pressure switch may prevent the burner from firing and cause the "Service System" light to go on. If the light remains on after the filter has been serviced, have a qualified service technician check the system.

For deck-level heater installations, the Pressure Switch is factory set at 3 psi (20.6 kPa). If the pressure switch is one to two feet (.3-.6M) below or one to five feet (.3-1.5M) above the pool water level, reset the switch so that it is open when the pump is off and closed when the pump is running. Turn the star-wheel on the switch clockwise (↷) to raise setting (heater below the pool) and counterclockwise (↶) to lower the setting (heater above the pool – see Figures 18 and 19). Test the switch after resetting.

NOTICE: When the heater is mounted more than five feet (1.5M) above or two feet (.6M) below the deck level, a Pressure Switch is no longer adequate. A Flow Switch must be installed instead.

NOTICE: Heater operation with incorrect Pressure Switch setting may cause operation with no water flow. Operation of the heater without sufficient water flow may severely damage it.

Verify proper operation of the water pressure switch at the start of every season and every six months thereafter by the following steps:

1. Lower the thermostat setting to turn off the heater.
2. Wait at least 15 minutes after the burner is off, and then turn off the filter pump.
3. Turn up the thermostat as though to fire the burner.
4. Wait one minute. The "Service System" light should go on but the burner should not fire and the blower should not start. If the blower or burner *do* start, or if the "Service System" light does *not* go on, there is a pressure switch malfunction. Immediately press the OFF button on the operating control to turn the burner off and call a qualified service technician to check the system.

⚠CAUTION Live steam hazard. If the Burner and the Pump stop at the same time, wait at least 15 minutes before starting the filter pump to avoid severe damage to the heater.

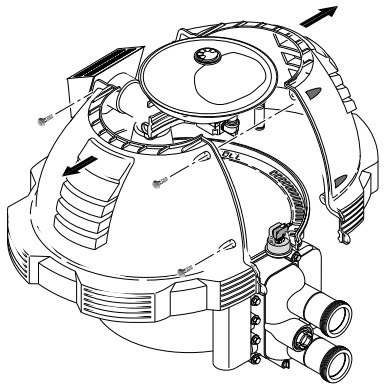

FIGURE 18: Remove cover for access to Switch

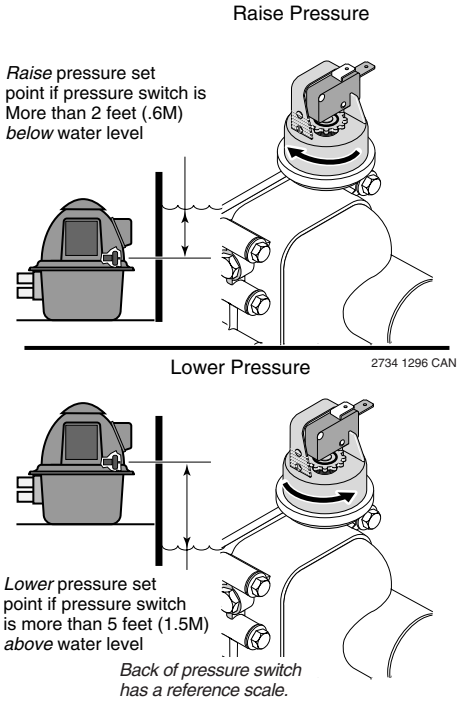

FIGURE 19: Water Pressure Switch Adjustment

PRESSURE RELIEF VALVE

Canadian code requires and some U.S. local codes may require installation of a pressure relief valve. Purchase separately and install a 3/4" pressure relief valve complying with the ANSI/ASME Boiler and Pressure Vessel Code, having a capacity equal to the Btu/hr rating of the heater. The relief pressure of the valve MUST NOT EXCEED 50 PSI.

A 3/4" NPT connection is provided in the manifold for installing a pressure relief valve. The relief valve must be installed vertically. To install the valve, use a 3/4" brass nipple and elbow (user supplied), as illustrated in Figure 20. No valve is allowed to be placed between the manifold adapter and the relief valve.

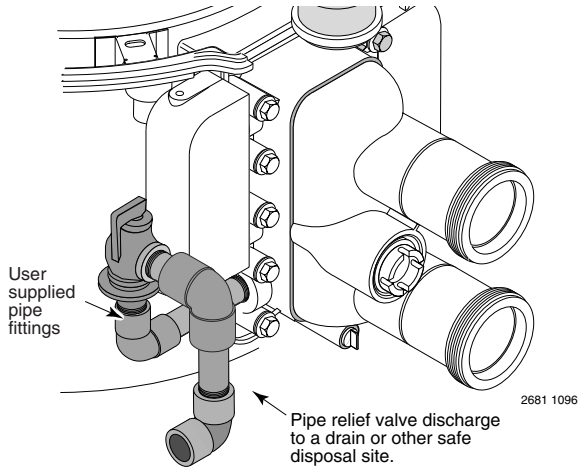

FIGURE 20: Relief Valve

To avoid water damage or scalding from operation of the relief valve, install a drain pipe in the outlet of the pressure relief valve that will direct water discharging from the valve to a safe place for disposal. Do not install any reducing couplings or valves in the drain pipe. The drain pipe must be installed so as to allow complete drainage from the valve and drain line. The relief valve should be tested at least once a year by lifting the valve lever.

⚠WARNING Explosion hazard. Any heater installed with restrictive devices in the piping system downstream from the heater (including check valves, isolation valves, flow nozzles, or therapeutic pool valving) must have a relief valve installed as described above.

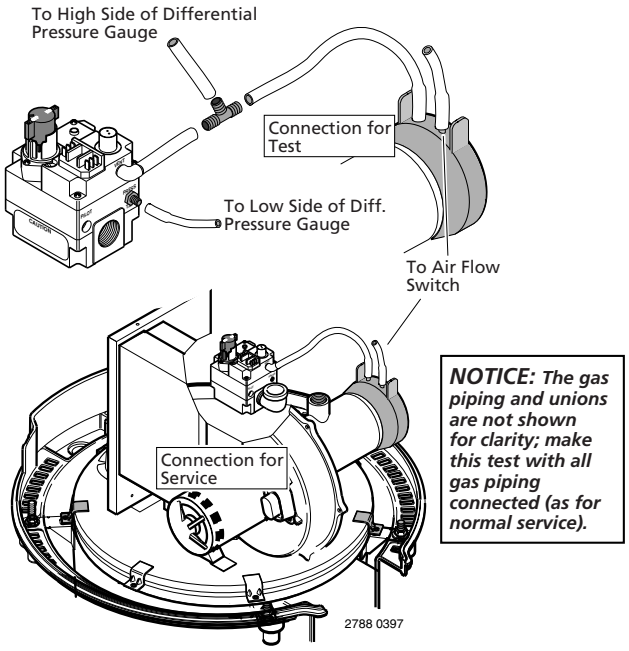

FIGURE 21: Connect Gas Valve to End Cap Air Orifice

Instructions For Checking the Gas Pressure Through the Combination Gas Control Valve

⚠WARNING Risk of fire and explosion. Improper installation, adjustment, alteration, service, or maintenance of the Combination Gas Control Valve can lead to fire or explosion, causing loss of life, personal injury, or property damage.

These instructions are for the use of qualified service technicians only!

Do not attempt this procedure unless you have been trained and certified in the care and repair of gas-fired appliances!

Do not attempt this procedure if the following instructions are confusing!

This appliance is equipped with an unconventional gas control valve that is factory set with a manifold pressure of –.2” (–0.5cm) wc. Installation or service must be performed by a qualified installer, service agency, or the gas supplier. If this control valve is replaced, it must be replaced with an identical control.

The combination gas valve incorporates dual shut-off valves and a negative-pressure regulator. For proper operation, the regulated pressure at the outlet manifold of the valve must be 0.2” (0.5cm) wc below the reference pressure at the blower mixer inlet, and the gas valve ‘VENT’ tap must be connected to the endcap air orifice as shown in Figure 21 (above).

Do not attempt to adjust the gas input by adjusting the regulator setting. The correct gas regulator setting is required to maintain proper combustion and must not be altered.

To check that the gas pressure setting is correct, use the following procedure:

1. Turn off the heater and remove the top covers for access to the Combination Gas Control Valve.
2. Use a 3/16” hex key to remove the plug from the ‘PRESSURE TAP’ port on the outlet side of the Combination Gas Control Valve.
3. Install a 1/8” NPT barbed fitting into the ‘PRESSURE TAP’ port. Use a flexible tube to connect it to the **low** side of a differential pressure gauge or a slope gauge. **NOTICE:** If you are using a slope gauge or a differential pressure gauge of less than 3” capacity, close the shutoff valve of the gauge to avoid pulling the liquid out of the gauge when the blower starts.
4. Disconnect the tube from the Gas Valve ‘VENT’ port. Connect it to a tube with a tee running to the high side of a differential pressure gauge and to the blower’s air orifice grille (See Figure 21, above).
5. Turn on the heater and verify the gas supply pressure (Page 20).
6. After the burner ignites, open the shutoff valve of the gauge. The pressure gauge should then read 0.2” wc ±0.1” wc (0.5cm wc ± 0.25cm wc) (0.0” to 0.1” wc (0.0 to 0.2 cm) = rich mixture; 0.3” (.75 cm) and above = lean mixture). (Since the pressure tap is connected to the low side of the gauge, the pressure is actually negative.)

   ⚠WARNING Risk of fire or explosion if Combination Gas Control Valve is incorrectly adjusted. If it is necessary to adjust the gas valve, this must be done only by a qualified service agency.
7. Turn off the heater.
8. Replace the plastic hose between the ‘VENT’ port and the inlet of blower mixer. Remove the barbed fitting and replace the plug in the ‘PRESSURE TAP’ port of the gas valve, using a thread sealant approved for use with natural gas and propane.
9. Replace the heater covers and cycle the heater to check for proper operation.

GAS CONNECTIONS

The heater requires a gas supply of not less than 4″ (10.2cm) wc and not more than 14″ (35.6cm) wc. Gas supply pressures outside of this range may result in improper burner operation. A minimum inlet pressure of 4″ (10.2cm) wc is required to maintain input rating.

The gas supply must be installed in accordance with the National Fuel Gas Code, ANSI Z223.1, or standard CAN/CGA B149.1 and B149.2, as applicable and all applicable local codes. Install a manual shut-off valve and a sediment trap and union located outside the heater jacket (Figure 22). Do not use a restrictive gas cock.

The following gas pipe sizes are recommended for natural gas supply piping. For low pressure LP gas, pipe size may be reduced by 1/4″, with a minimum pipe size of 3/4″. Check for compliance with local codes.

NOTICE: DO NOT use a corrugated flexible gas line to supply the heater. it will not deliver enough gas (at nominal diameter) to supply heater.

Table 10

Recommended Pipe Size For Natural Gas 1,000 BTU/ft³, 0.6 Sp Gr, 0.5” wc Pressure Drop					
Model	**0-25’ (0-7.6M)**	**26-50’ (7.6-15M)**	**51-100’ (15-31M)**	**101-200’ (31-62M)**	**201-300’ (62-92M)**
200	3/4”	1”	1”	1-1/4”	1-1/4”
333	1”	1-1/4”	1-1/4”	1-1/2”	1-1/2”
400	1”	1-1/4”	1-1/4”	1-1/2”	2”

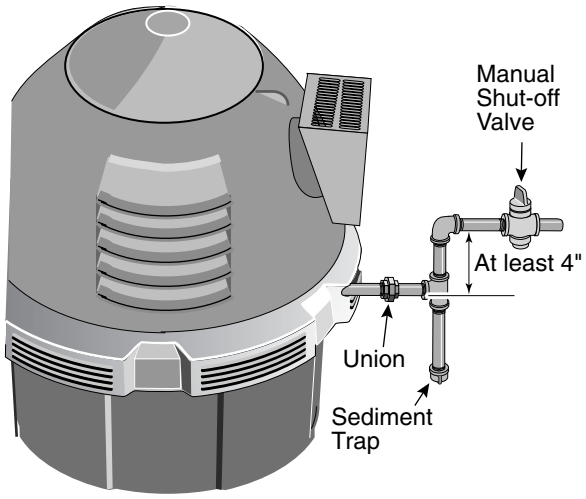

FIGURE 22: Gas line and Trap

PRESSURE TESTING

Before operating the heater, the heater and its gas connections must be leak tested. Test all gas connections for leaks with soapy water.

⚠WARNING Risk of fire or explosion. Do not use an open flame to test for leaks.

The heater and its individual shutoff valve must be disconnected from the gas supply piping system during any pressure testing of that system at test pressures in excess of 1/2 psig (3.5 kPa).

The heater must be isolated from the gas supply system by closing its individual manual shutoff valve during any pressure testing of the gas supply at test pressures equal to or less than 1/2 psig (3.5 kPa).

SUPPLYING POWER TO THE HEATER

The heater requires a 120V/60Hz/1Ph power supply. Enclose the 120 Volt line to the heater in an approved flexible conduit connected directly to the junction box on the inside of the heater jacket.

Line voltage field wiring should be 14 gauge, with a circuit capacity of 15 amps.

ELECTRICAL WIRING

1. All wiring must be in accordance with all applicable codes.
2. The heater, when installed, must be electrically grounded and bonded in accordance with local codes or, in the absence of local codes, with the National Electrical Code or the Canadian Electrical Code (as applicable). A bonding lug is provided on the outside of the jacket under the vent for this purpose.
3. Electrical power circuits to the pool heater must follow local codes and National Electrical Code or Canadian Electrical Code (as applicable).
4. All wiring between the heater and devices not attached to it, or between separate devices which are field installed and located, shall conform to the specifications of Type T wire (35°C rise).
5. All line voltage wiring shall be enclosed in approved flexible conduit, and shall be securely attached to the field wiring box located inside the jacket. The conduit or cable connector at the field wiring box should contain an insulating bushing or its equivalent to prevent abrasion of the wires as they enter the box.
6. **The filter pump should run continuously when the heater is on, and for at least 15 minutes after the heater is off.** Any switches in the pump circuit (including circuit breakers) that can disconnect the pump must also disconnect the heater.
7. Do not wire single pole switches, including protective devices, into a grounded line. Observe hot/neutral polarity when connecting power to the heater.

Connect the hot lead of the power supply to the black wire, the neutral lead to the white wire, and the ground wire to the green wire (See Figure 23).

A time clock controlling the filter pump should have a low-voltage Fireman's Switch that switches off the heater at least 15 minutes before shutting off the pump.

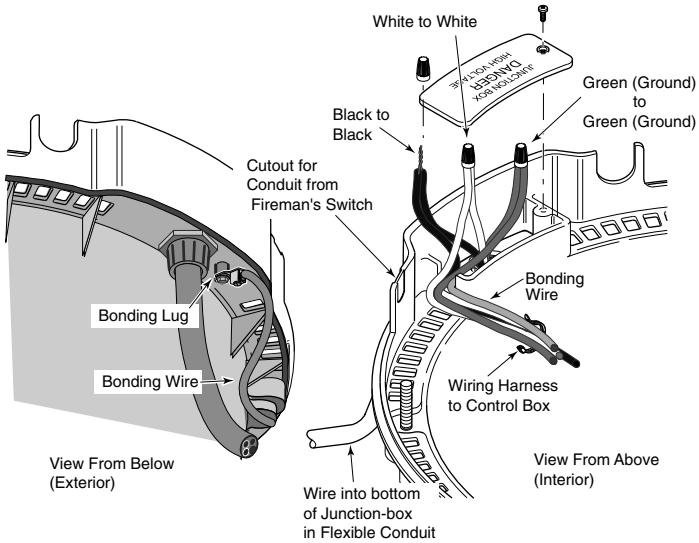

FIGURE 23: Field Wiring

FIREMAN'S SWITCH CONNECTION

NOTICE: If, while there is 120VAC connected to the heater, you touch either 120VAC terminal with any 24VAC wire that is connected to the control board (including the Fireman's Switch jumper), you will immediately destroy the control board and void the warranty.

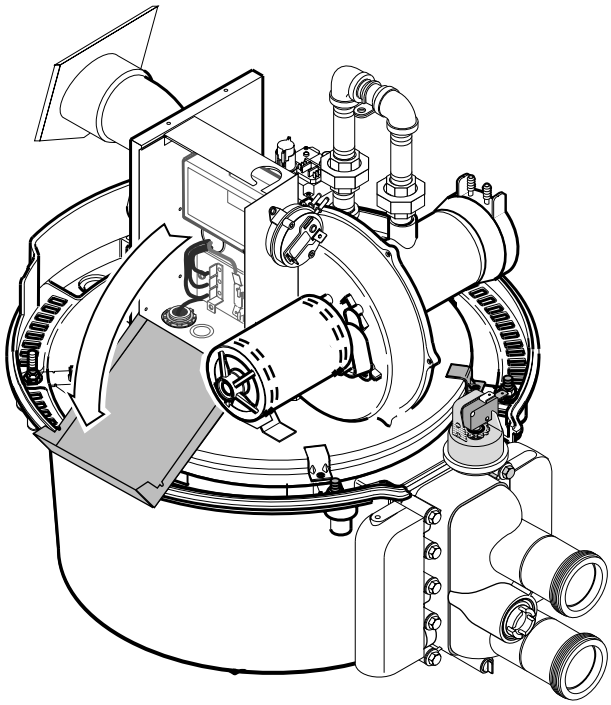

FIGURE 24: Open Control Box Cover

NOTICE: When using a timer and Fireman's Switch, the heater's power supply should come from the load side of the timer. The Fireman's Switch completes the circuit for the low voltage safety switches. It DOES NOT get any power from the 115 volt power supply.

Connect the Fireman's switch to the heater as follows:

1. Turn off power to heater at main circuit breaker panel.
2. Unbolt and remove the upper jacket halves (see Figure 3, Page 5).
3. Open control box cover (see Figure 24).
4. Remove the factory-installed jumper between the Fireman's Switch terminals (see Figure 25).
5. Connect the wires between the Fireman's Switch terminals on the heater and those on the time clock using 18 gauge wire with a minimum 3/64" (1.2mm) thick insulation rated for a temperature rise of at least 105°C. Route the wires out through the knockout on the bottom of the Control Box. Use a 90° conduit el and conduit run out through the cutout on the Lower Enclosure, next to the Junction Box (see Figure 23).

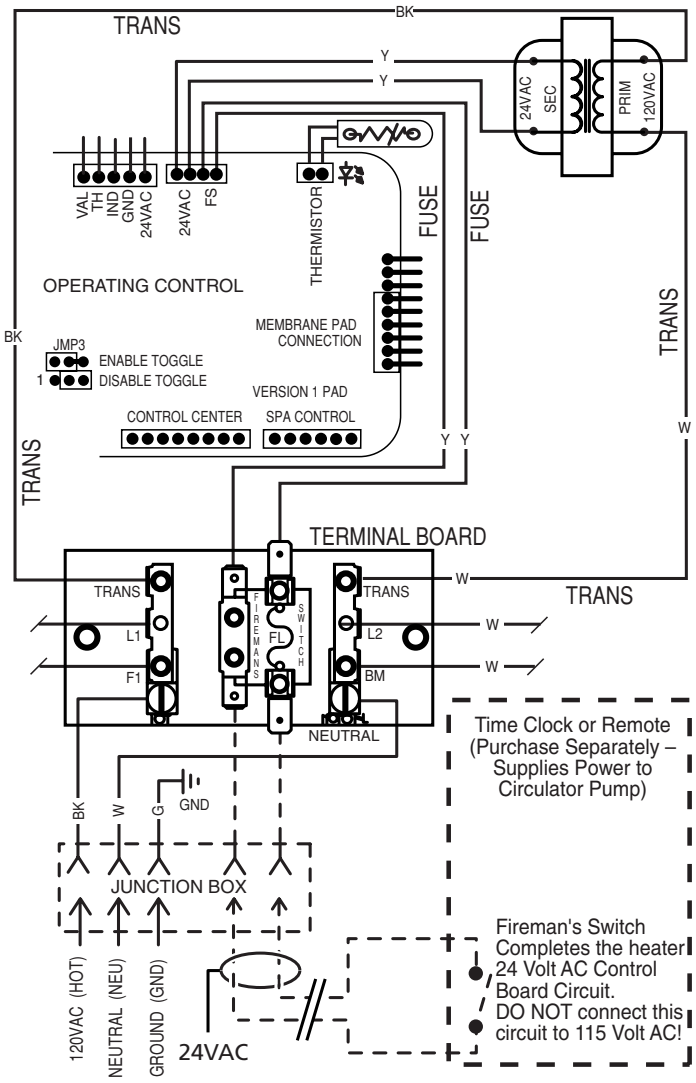

FIGURE 25: Fireman's Switch Connections

6. Reinstall and bolt up the jacket halves.

The fuse for the Fireman's Switch is a 1.25 amp 1-1/4x1/4" fast blow fuse, available locally.

MAXIMUM TEMPERATURE SET POINT

1. Unbolt and remove upper jacket halves (see Figure 3, Page 5).
2. Depress clips and remove control panel board dome (see Figure 9, Page 10).
3. Push the Max. Temp. Set Point button on the back of the control board (see Figure 26). The following sequence should happen:

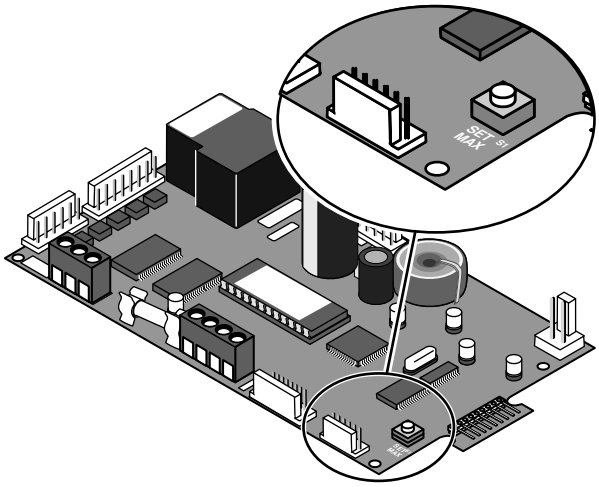

FIGURE 26: Max Temperature Set Point Controls

   A. The unit will come on and the POOL ON light will come on.
   B. Press the ▼Temp or ▲Temp pad (on TOP of the panel) to set maximum pool temperature.
   C. Wait 30 seconds; the POOL ON light will go off and the SPA ON light will come on.
   D. Press the ▼Temp or ▲Temp pad (on TOP of the panel) to set maximum spa temperature (set temperature to 104°F (40°C) or less).
   E. Wait 30 seconds; the SPA ON light will go off and the unit will shut down.
4. Reinstall and bolt up the jacket halves.

Initial Troubleshooting

Only qualified, trained service technicians with appropriate test equipment should service the heater. Remember that all parts of the system affect heater operation. Before starting this troubleshooting procedure, make sure that the pump is running correctly, that there are no blockages in the system, that the valves are correctly set and that the time clock is correctly set and is running.

Start here for directions to specific Troubleshooting Chart

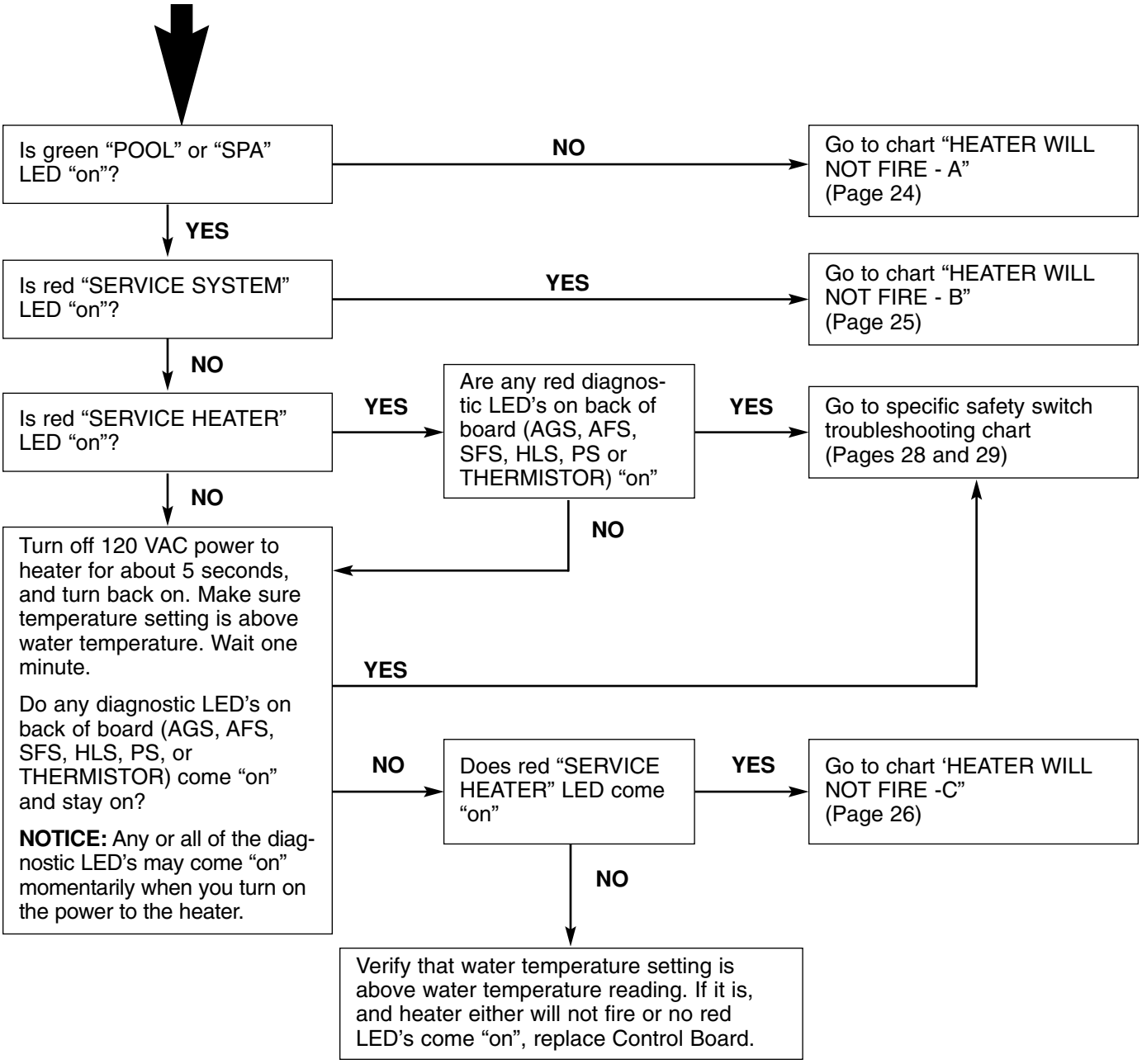

⚠WARNING **Hazardous voltage. Can shock, burn or kill.** Disconnect power before servicing any components.

⚠WARNING **Fire and Explosion hazard.** Do not jumper switch terminals to remedy a failed safety switch.

Heater Will Not Fire - A

Start

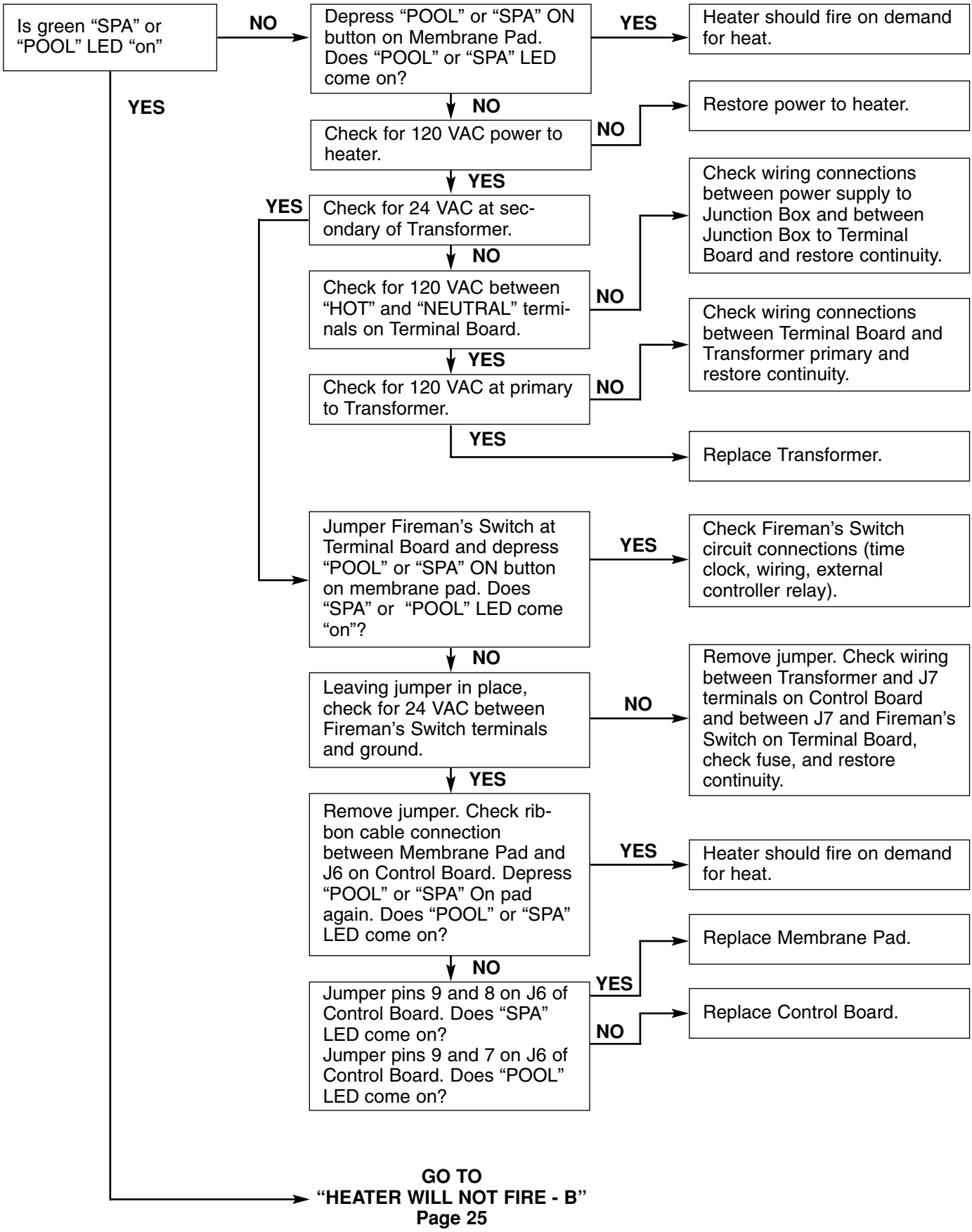

Heater Will Not Fire - B

Start

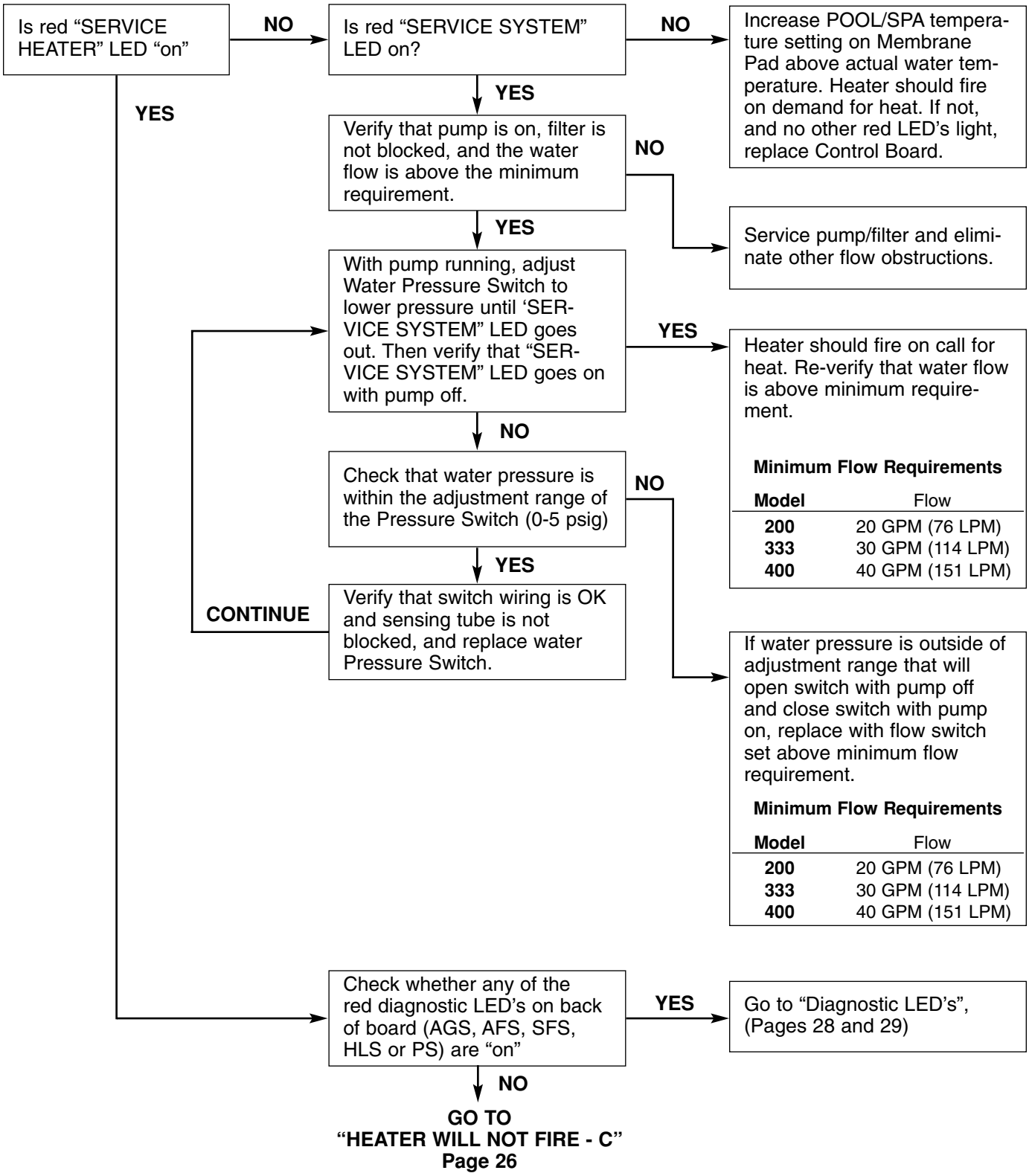

Heater Will Not Fire - C

Start

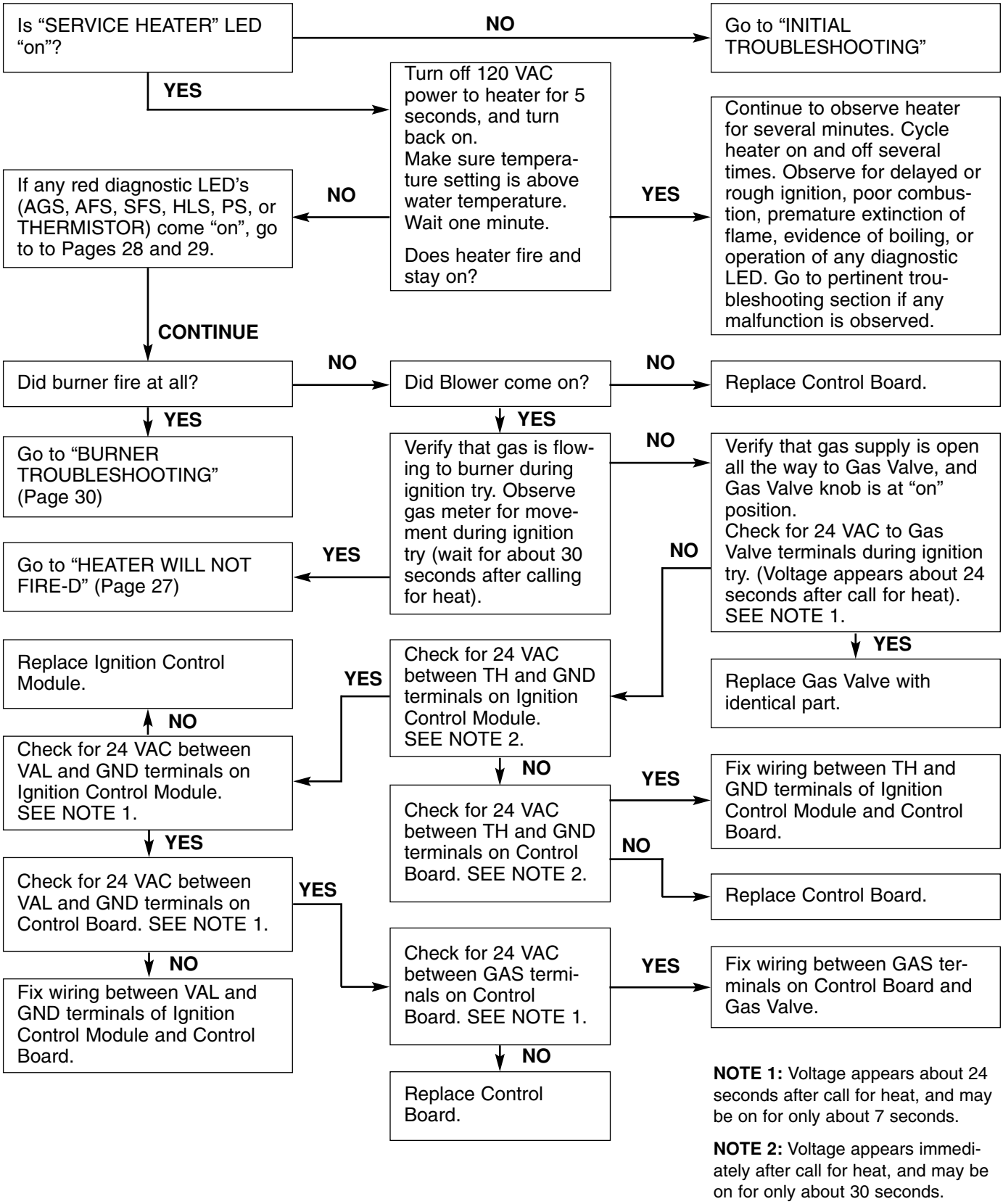

NOTE 1: Voltage appears about 24 seconds after call for heat, and may be on for only about 7 seconds.

NOTE 2: Voltage appears immediately after call for heat, and may be on for only about 30 seconds.

Heater Will Not Fire - D

Start

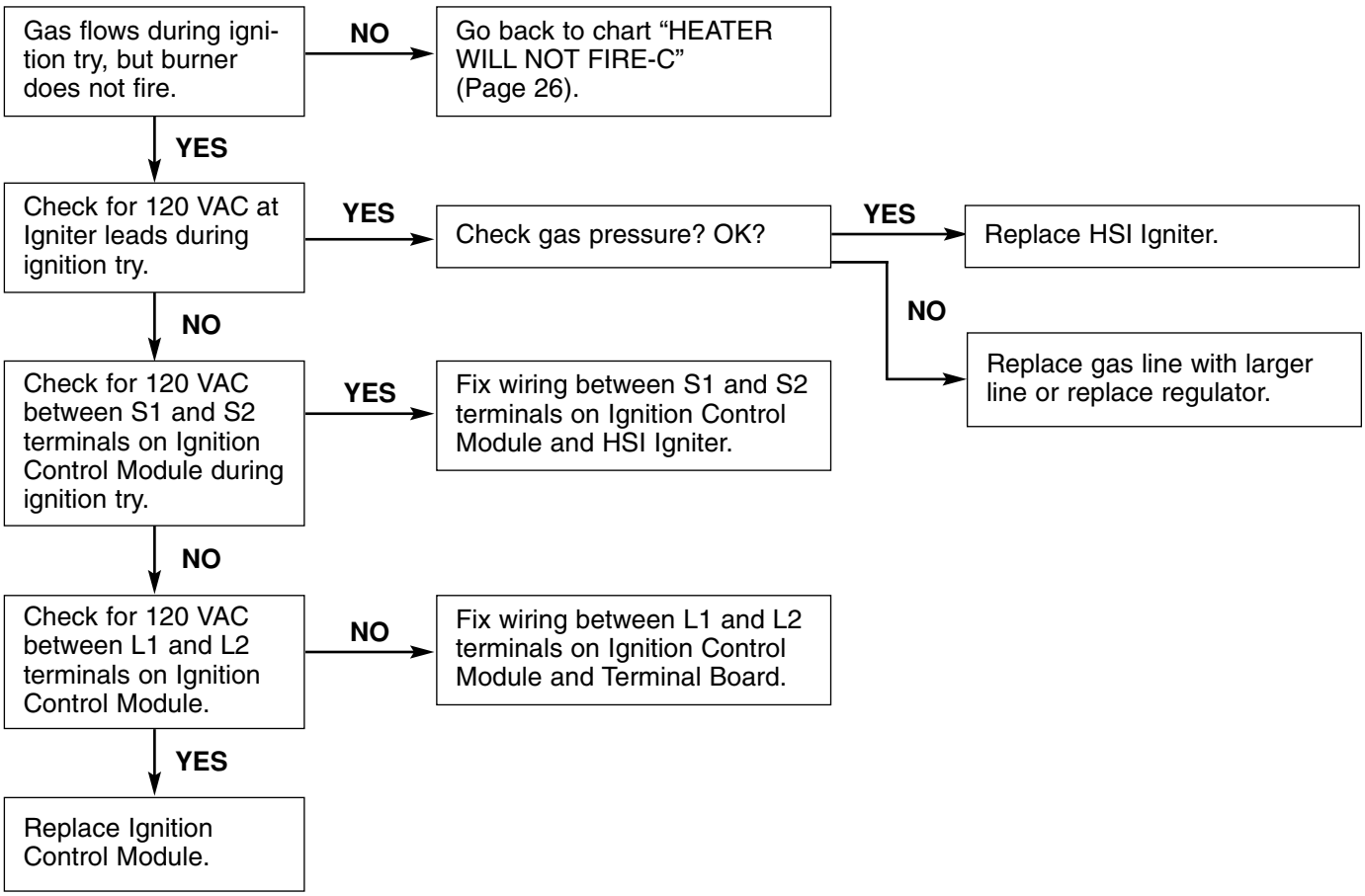

Diagnostic LED's: AGS, AFS, HLS, PS, THERMISTOR

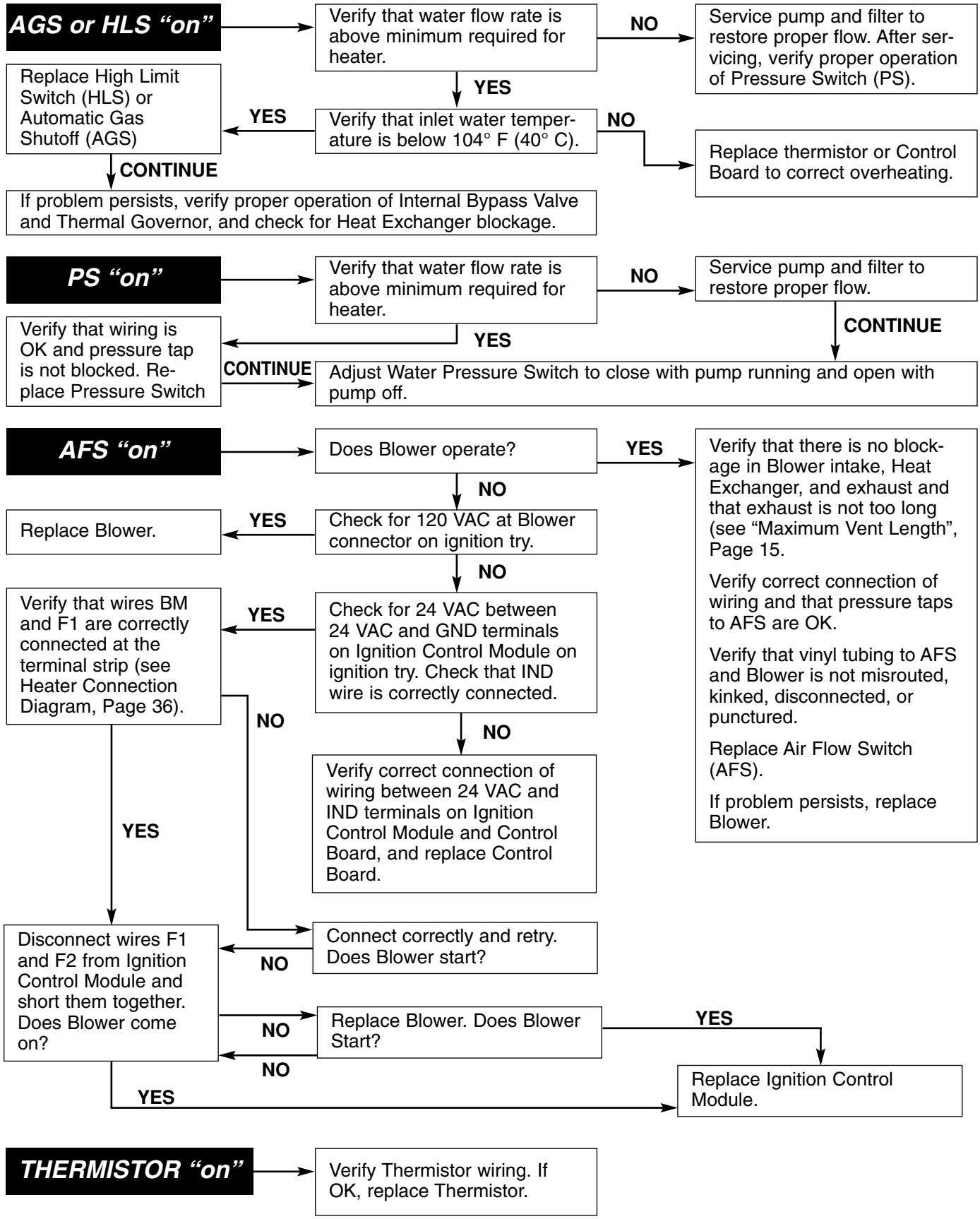

⚠ CAUTION **Do not jumper a safety switch to remedy a failed switch.**

NOTE: ES1 is a spare and should be jumpered.

Diagnostic LED's: SFS

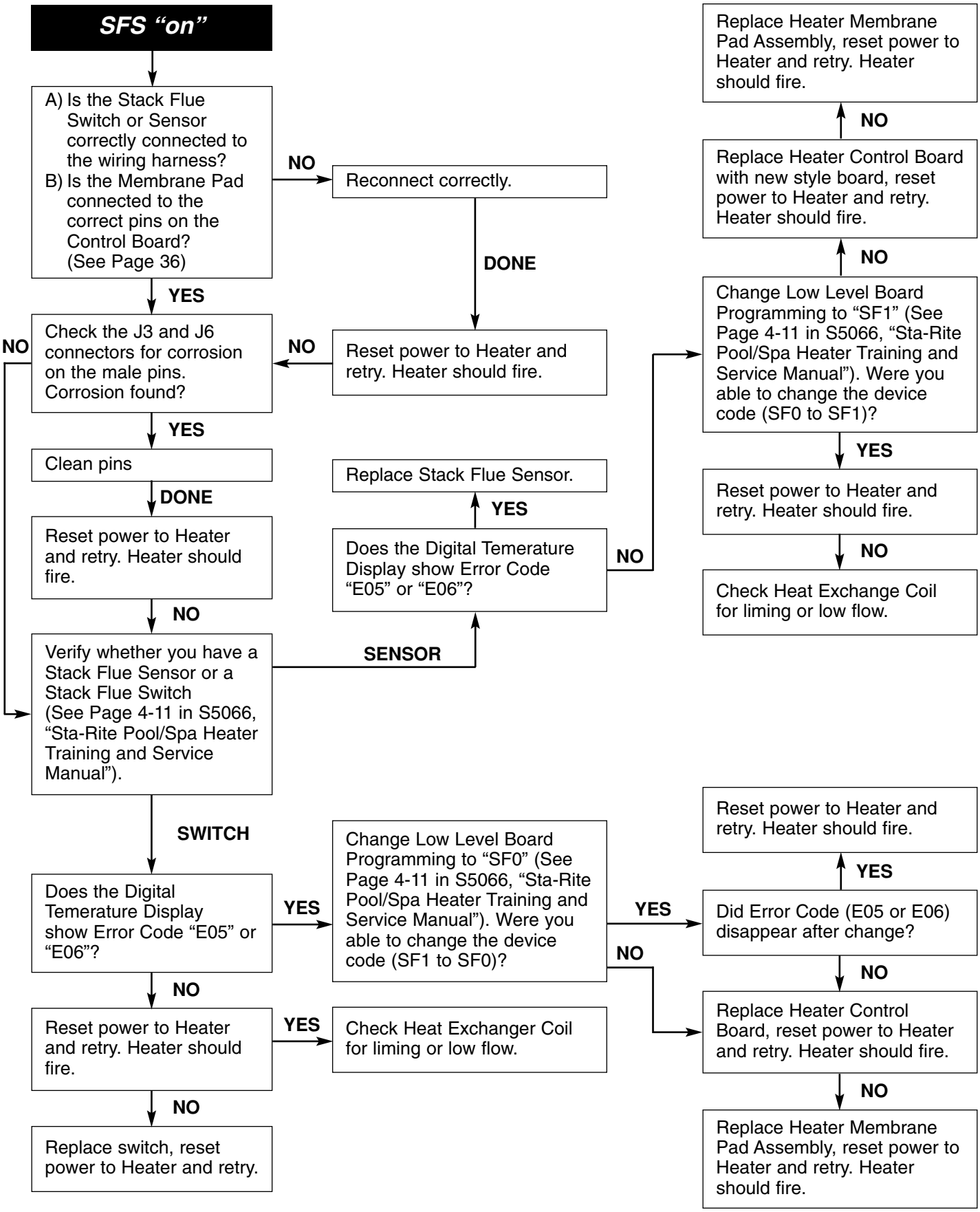

Burner Troubleshooting

SYMPTOM	CAUSE	REMEDY
Loud, high-pitched whine	Flame is too rich.	Verify pressure tap between gas valve and blower inlet. Turn to Page 19 and verify that the gas regulator setting is 0.2″ (0.5cm) wc below the blower inlet pressure. Replace gas orifice with **smaller** size.
Flame is "fluttery." Exhaust may have acrid smell or burner may fail to stay lit.	Flame is too lean.	Turn to Page 19 and verify that the gas regulator setting is 0.2″ (0.5cm) wc below the blower inlet pressure. Replace gas orifice with **larger** size.
Burner pulsates or surges, especially on ignition.	Exhaust vent is too long.	Reduce length of exhaust vent and/or number of elbows.
Combustion appears normal, but flame does not stay lit.	Flame current is not being sensed.	Check for wet or damaged igniter with low resistance to ground. Replace with new igniter. Verify burner flameholder is properly grounded. Replace Ignition Control Module.

Heat Exchanger Troubleshooting

SYMPTOM	CAUSE	REMEDY
Boiling in heat exchanger. May be accompanied by "bumping" sounds.	Low water flow to heater.	Service pump and or filter.
	Heat exchanger plugged.	Service heat exchanger. Correct water chemistry.
	Bypass valve stuck open.	Service bypass valve.
	Thermal governor stuck closed.	Replace thermal governor.
Sweating.	Thermal governor failed.	Replace thermal governor.

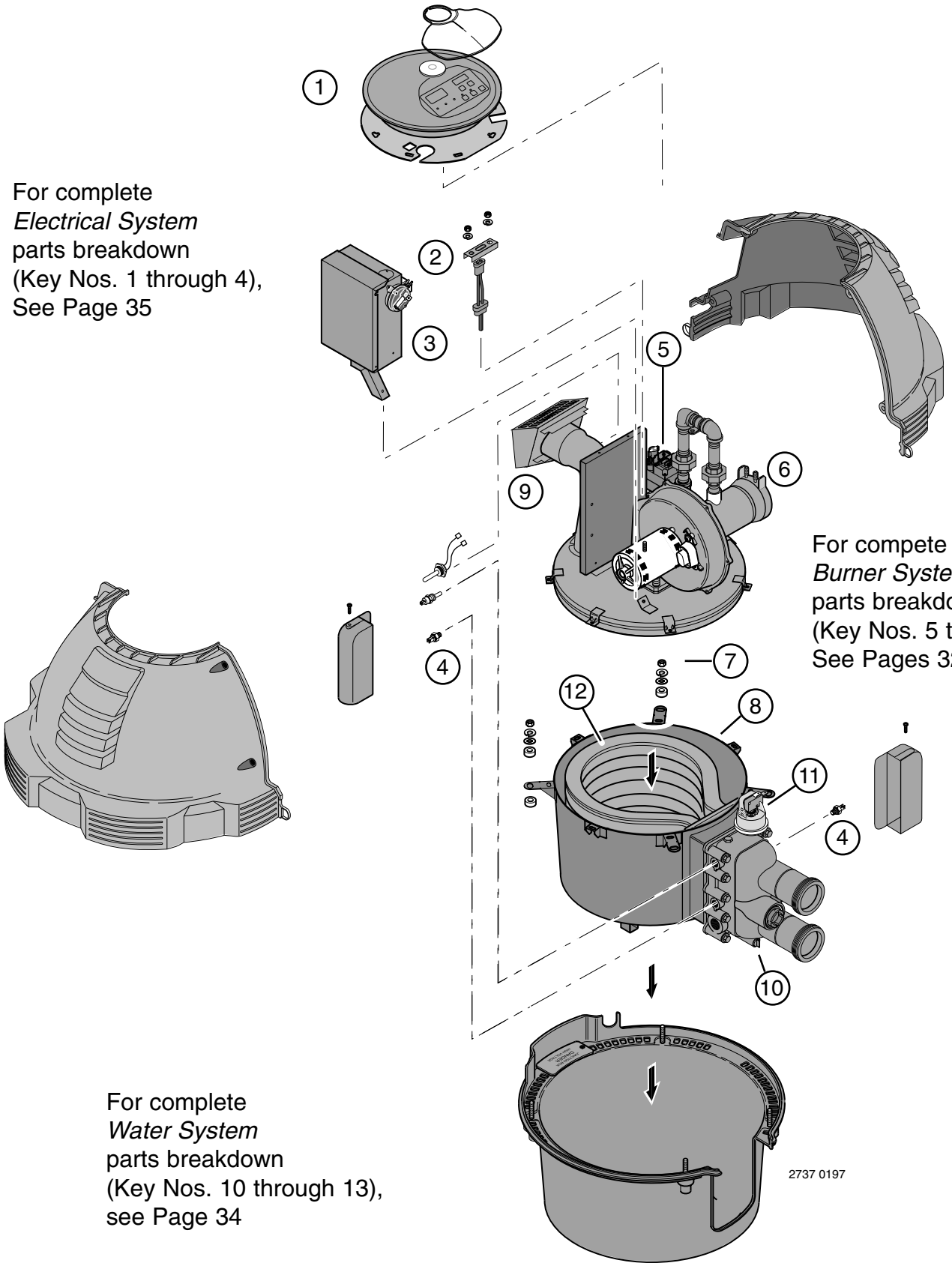

For complete
Electrical System
parts breakdown
(Key Nos. 1 through 4),
See Page 35

For compete
Burner System
parts breakdown
(Key Nos. 5 through 9),
See Pages 32 and 33

For complete
Water System
parts breakdown
(Key Nos. 10 through 13),
see Page 34

Repair Parts are available from your Sta-Rite dealer.
If your dealer cannot supply you, call Sta-Rite Customer Service at 1-800-752-0183.

For Heater mounting bolts and clamps, purchase separately **Bolt Down Bracket Kit**, Part No. 42001-0085S.

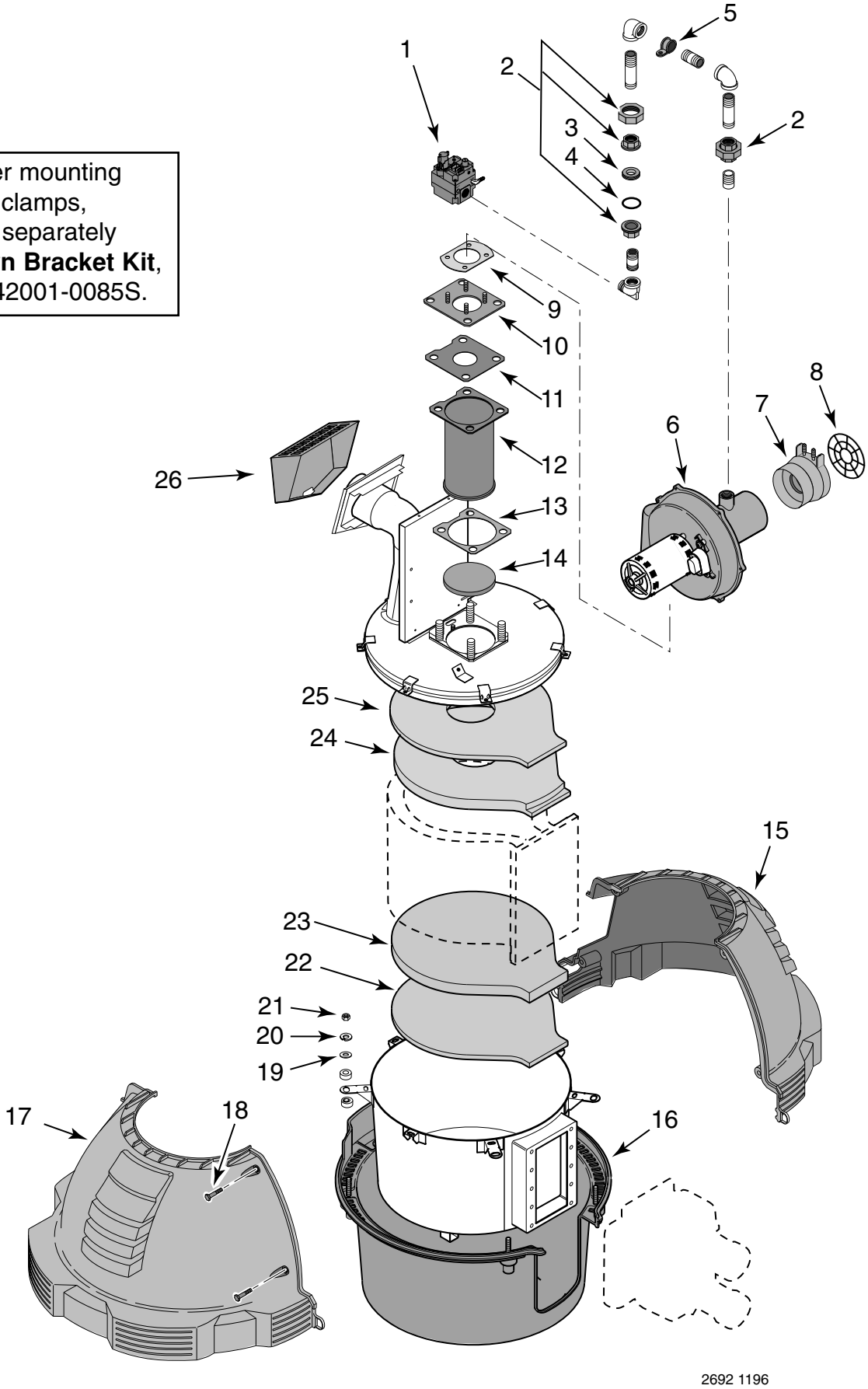

REPAIR PARTS – BURNER SYSTEM

No. No.	Part Description	Qty.	Model SR200NA SR200LP SR200HD	SR333NA SR333LP SR333HD	SR400NA SR400LP SR400HD
1	Combination Gas Control Valve Kit	1	42001-0051S	42001-0051S	42001-0051S
2	3/4” Union	2	38404-4097S	38404-4097S	38404-4097S
•	Gas Orifice Kit – NG (Incl. Key Nos. 3 and 4)†		77707-0331	77707-0321	77707-0311
3	Gas Orifice – NG*	1	42001-0331	42001-0321	42001-0311
4	Gas Orifice O-Ring	1	U9-370	U9-370	U9-370
•	Gas Orifice Kit – Propane (Incl. Key Nos. 3 and 4)†		77707-0361	7707-0351	77707-0341
3	Gas Orifice – Propane*	1	42001-0361	42001-0351	42001-0341
4	Gas Orifice O-Ring	1	U9-370	U9-370	U9-370
•	NG to Propane Conversion Kit (Incl. Key Nos. 3 and 4)†		77707-1361	77707-1351	77707-1341
3	Gas Orifice – Propane*	1	42001-0361	42001-0351	42001-0341
4	Gas Orifice O-Ring	1	U9-370	U9-370	U9-370
•	Conversion Instructions, NG to Propane*	1	S402	S402	S402
•	NP to Propane Conversion Decal*	1	32165-4082	32165-4082	32165-4082
•	Propane to NG Conversion Kit (Incl. Key Nos. 3 and 4)†		77707-1331	77707-1321	77707-1311
3	Gas Orifice – Propane*	1	42001-0331	42001-0321	42001-0311
4	Gas Orifice O-Ring	1	U9-370	U9-370	U9-370
•	Conversion Instructions, Propane to NG*	1	S403	S403	S403
•	Propane to NG Conversion Decal*	1	32165-4083	32165-4083	32165-4083
5	Gas Piping Clamp Kit	1	31786-4019S	31786-4019S	31786-4019S
6	Air Blower Kit	1	42001-0206S	42001-0206S	42001-0206S
7	Endcap/Air Orifice – Inlet Mixing Tube	1	77707-0091	77707-0092	77707-0093
8	Endcap Mixing Tube Grill	1	42001-0094S	42001-0094S	42001-0094S
•	Blower/Adapter Plate Gasket Kit (Includes Key Nos. 9, 11, 13)	1	77707-0011	77707-0011	77707-0011
9	Blower/Adapter Plate Gasket*	1	42001-0067	42001-0067	42001-0067
10	Blower Adapter Plate	1	42001-0090	42001-0090	42001-0090
•	Flameholder Kit (Includes Key Nos. 11, 12, 13, 14 and Flameholder Insert)		77707-0202	77707-0203	77707-0204
11	Flameholder/Adapter Plate Gasket*	1	42001-0084	42001-0084	42001-0084
12	Flameholder Assembly*	1	42001-0202	42001-0203	42001-0204
13	Flameholder/Combustion Chamber Gasket	1	42001-0065	42001-0065	42001-0065
14	Flameholder Insulation Cap	1	42001-0075	42001-0075	42001-0075
•	Flameholder Insert*	1	–	42001-0027	42001-0027
•	Condensate Evaporator	1	42001-0031	42001-0031	42001-0031
15	Upper RH Heater Enclosure Kit**		77707-0002	77707-0002	77707-0002
16	Lower Enclosure	1	42001-0001S	42001-0001S	42001-0001S
•	Upper Enclosure Gasket	1	33457-1051S	33457-1051S	33457-1051S
17	Upper LH Heater Enclosure Kit-NG	1	77707-3200N	77707-3333N	77707-3400N
18	Upper Enclosure Fastener Kit	1	77707-0007	77707-0007	77707-0007
19	3/8” Flat Washer	4	U43-62SS	U43-62SS	U43-62SS
20	3/8” Lock Washer	4	U43-12SS	U43-12SS	U43-12SS
21	3/8” Hex Nut	4	U36-38SSW	U36-38SSW	U36-38SSW
•	Insulation Kit (Includes Key Nos. 22, 23, 24, 25 and Condensate Evaporator, Page 34)	1	77707-0008	77707-0008	77707-0008
22	1/2” Bottom Outer Insulation Blanket*	1#	42001-0073	42001-0073	42001-0073
23	1” Bottom Inner Insulation*	1	42001-0072	42001-0072	42001-0072
24	1” Top Inner Insulation*	1	42001-0070	42001-0070	42001-0070
25	1/2” Top Outer Insulation Blanket*	1	42001-0071	42001-0071	42001-0071
•	Lower Enclosure Insulation	1	42001-0074S	42001-0074S	42001-0074S
26	Metal Vent Cover	1	42002-0005S	42002-0005S	42002-0005S
•	Metal Exhaust Elbow Kit	1	42001-0209S	42001-0209S	42001-0209S
•	One-Piece Metal Elbow/Cover Assembly	1	42001-0214S	42001-0214S	42001-0214S

* Not available separately.
** Kit parts not available separately.
• Not illustrated.
† Not included with heater. Order separately.
# Model SR200 uses 2.

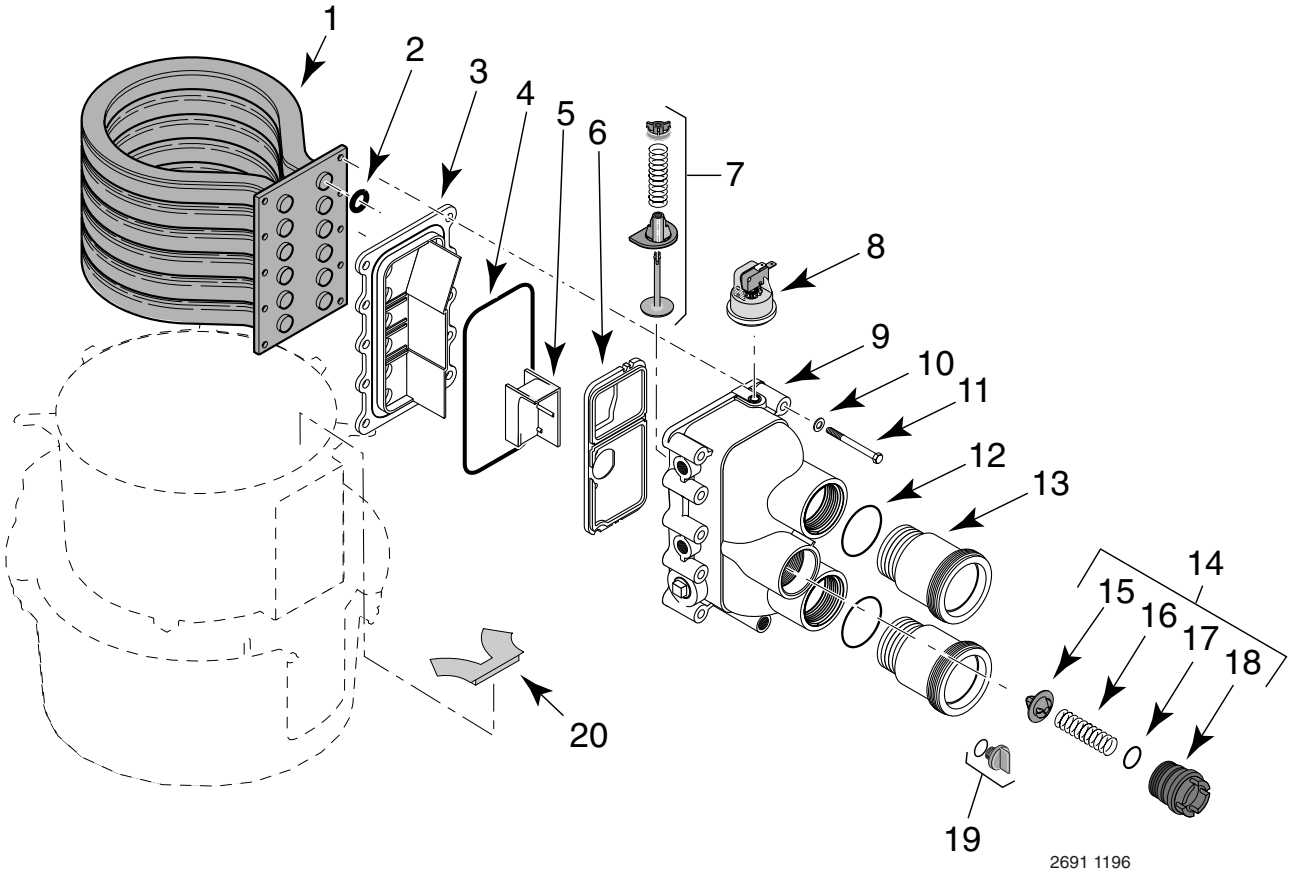

REPAIR PARTS – WATER SYSTEM

Key No.	Part Description	Qty.	Model: SR200NA SR200LP SR200HD	Model: SR333NA SR333LP SR333HD	Model: SR400NA SR400LP SR400HD
1	Tube Sheet Coil Assembly Kit (Includes Key No. 2)	1	77707-0232	77707-0233	77707-0234
1	Tube Sheet Coil Assembly Kit (Includes Key No. 2) (HD Models only)	1	77707-0242	77707-0243	77707-0244
2	Coil/Tubesheet Sealing O-Ring Kit	( )	77707-0117(6)	77707-0118(10)	77707-0119(12)
3	Manifold Bottom Plate	1	42002-0015	42002-0016	42002-0017
4	Manifold O-Ring*	1	35505-7437	35505-7437	35505-7437
•	O-Ring Kit (Incl. Key Nos. 2, 4)	1	77707-0120	77707-0120	77707-0120
5	Manifold Insert*	1	42002-0018	42002-0019	42002-0020
6	Manifold Baffle Plate*	1	42002-0013	42002-0014	42002-0022
7	Manifold Bypass Valve Kit	1	77707-0001	77707-0001	77707-0001
8	Water Pressure Switch	1	42001-0060S	42001-0060S	42001-0060S
9	Manifold Body with Safeties** (Incl. Key Nos. 10, 11)	1	77707-0205	77707-0205	77707-0205
9	Manifold Body Only (Incl. O-Ring Kit)	1	77707-0206	77707-0206	77707-0206
10	5/16 Flat Washer	10	U43-41SS	U43-41SS	U43-41SS
11	5/16-18x2-3/4” Hex Capscrew	10	37007-0214	37007-0214	37007-0214
12	Connector Tube O-Ring	2	U9-226	U9-226	U9-226
13	Connector Tube Kit (Includes O-Ring)	2	77707-0017	77707-0017	77707-0017
14	Thermal Regulator Kit (Incl. Key Nos. 15, 16, 17, 18 and Spring Clip)	1	77707-0010	77707-0010	77707-0010
15	Thermal Regulator (Includes Spring Clip)	1	38000-0007S	38000-0007S	38000-0007S
16	Thermal Regulator Spring*	1	37607-0011	37607-0011	37607-0011
17	Thermal Regulator Cap O-Ring	1	35505-1313	35505-1313	35505-1313
•	Thermal Regulator Spring Clip*	1	42001-0097	42001-0097	42001-0097
18	Thermal Regulator Cap*	1	42001-0016	42001-0016	42001-0016
19	Drain Plug	1	U178-920P	U178-920P	U178-920P
20	Condensate Evaporator*	1	42001-0031	42001-0031	42001-0031

* Not available separately.
• Not illustrated.
** See Page 35 Key Nos. 7, 8, 9 and 10 for Safeties and Relief Valve Port Plug.

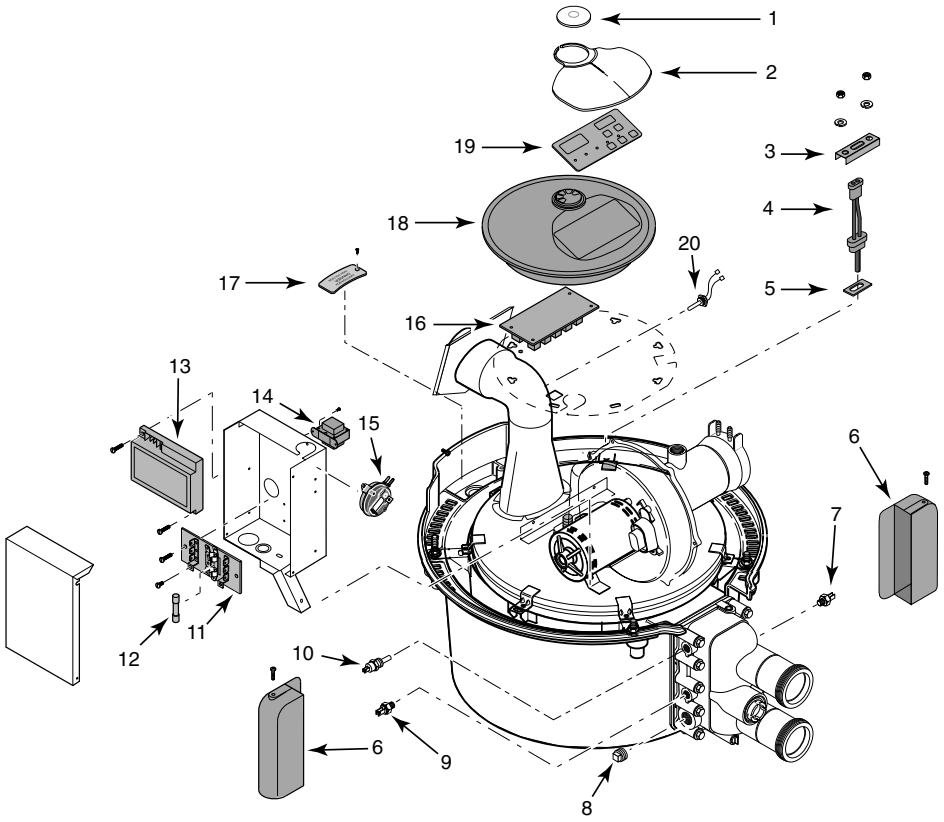

REPAIR PARTS – ELECTRICAL SYSTEM

Key No.	Part Description	Qty.	Model SR200NA SR200LP SR200HD	Model SR333NA SR333LP SR333HD	Model SR400NA SR400LP SR400HD
•	Display Cover Retainer Cap Kit (Incl. Key No. 1)*		77707-0009	77707-0009	77707-0009
1	Display Cover Retainer Cap	1	42001-0009	42001-0009	42001-0009
•	CPSC Warning Label	1	32165-4084	32165-4084	32165-4084
2	Heater Display Cover	1	42001-0008S	42001-0008S	42001-0008S
3	Igniter Bracket	1	42001-0030S	42001-0030S	42001-0030S
•	Igniter/Igniter Gasket Kit (Incl. Key Nos. 4 and 5)		77707-0054	77707-0054	77707-0054
4	Igniter**	1	42001-0054	42001-0054	42001-0054
5	Igniter Gasket	1	42001-0066S	42001-0066S	42001-0066S
6	Manifold Switch Cover	2	42001-0007S	42001-0007S	42001-0007S
7	Automatic Gas Shutoff Switch (AGS)	1	42002-0025S	42002-0025S	42002-0025S
8	3/4” Hex Head Pipe Plug	1	WC78-38AT	WC78-38AT	WC78-38AT
9	High Limit Switch	1	42001-0063S	42001-0063S	42001-0063S
10	Thermistor	1	42001-0053S	42001-0053S	42001-0053S
11	Terminal Board	1	42001-0056S	42001-0056S	42001-0056S
12	Fireman’s Switch Fuse (1.25A, 1-1/4”)	1	32850-0099	32850-0099	32850-0099
13	Ignition Control Module	1	42001-0052S	42001-0052S	42001-0052S
14	Transformer	1	42001-0057S	42001-0057S	42001-0057S
15	Air Flow Switch	1	42001-0059S	42001-0059S	42001-0059S
16	Control Board Kit	1	42001-0096S	42001-0096S	42001-0096S
•	#6-19x5/16” Phil Pan	4	37337-0092	37337-0092	37337-0092
•	Heater Wiring Harness	1	42001-0058S	42001-0058S	42001-0058S
•	Junction Box Cover Kit (Incl. Key No. 17)*		77707-0022	77707-0022	77707-0022
17	Junction Box Cover	1	42001-0022	42001-0022	42001-0022
•	Junction Box Wiring Decal	1	32165-4081	32165-4081	32165-4081
•	Control Bd Encl/Membrane Panel Kit (Incl. Key Nos. 18 and 19)*		77707-0004	77707-0004	77707-0004
18	Control Board Enclosure	1	42001-0004	42001-0004	42001-0004
19	Membrane Pad**	1	42001-0055	42001-0055	42001-0055
20	Stack Flue Sensor	1	42002-0024S	42002-0024S	42002-0024S

* Kit parts not available separately.
** Not available separately.
*** Available separately.
• Not illustrated.

Pool Heater Wiring Connection Diagram

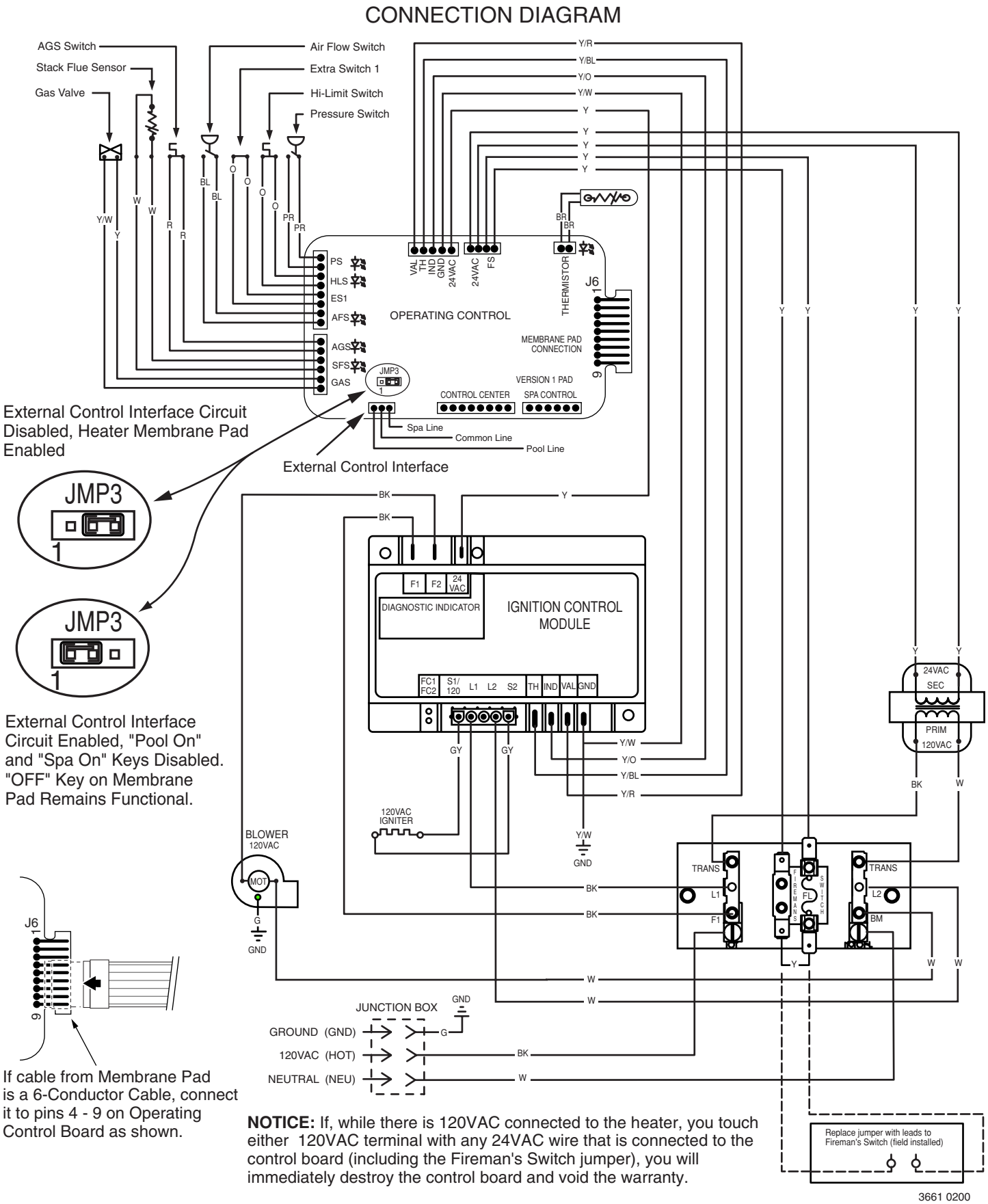

NOTICE: If, while there is 120VAC connected to the heater, you touch either 120VAC terminal with any 24VAC wire that is connected to the control board (including the Fireman's Switch jumper), you will immediately destroy the control board and void the warranty.

Pool Heater Electrical Schematic Ladder Diagram

LADDER DIAGRAM

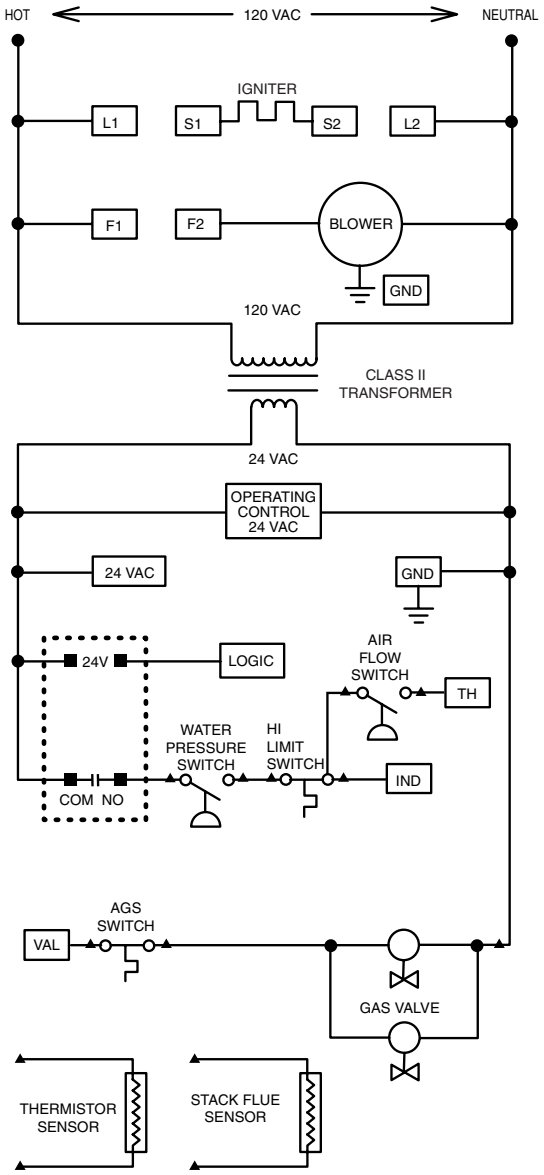

NOTES:

1.) L1 L2 F1 F2 S1 24 VAC S2 GND IND VAL AND TH

ARE CONNECTED ON THE IGNITION MODULE.

2.) ▲ PIN AND SOCKET CONNECTOR.

3.) IF ANY OF THE ORIGINAL WIRES AS SUPPLIED WITH THE APPLIANCE MUST BE REPLACED, THEY MUST BE REPLACED WITH TYPE 105°C OR ITS EQUIVALENT.

STA-RITE LIMITED WARRANTY

Pumps, filters, skimmers, underwater lights (except bulbs), accessories and fittings manufactured by Sta-Rite are warranted to be free of defects in material and workmanship for one (1) year from date of installation.

Product specific warranties:	**Year from date of installation**
HRPB, DEPB, System 3, and PL – Tanks	10 years
Internal filter components and valves	1 year
Max-E-Therm – Pool/Spa Heaters	2 years
Heater Enclosure only (Upper RH & LH; lower enclosure; and control board enclosure)	10 years
Automatic Pool Cleaners including Hose	2 years
Cristal-Flo filters – Tanks	10 years pro-rated*
Valve and internal components.	1 year
Posi-Flo II – Tanks	10 years
Elements	1 year
PRC Cartridge –	
Filter Tanks	5 years pro-rated (1st 2 years full)
Elements	1 year
System 3 Above Ground Systems – Tanks	10 years
Pumps / Platform and Internals	1 year
Pumps	1 year
When equipped with A.O. Smith 2-compartment motors (Does not include pumps sold as part of a systems package)	2 years
Traps / In-Line Strainers	1 year
Vertical Commercial Filter – Tanks	10 years
Internals	1 year
Horizontal Commercial Filter	
Tanks	5 years
(Years 6-9, Prorated declining 20%/year, Yr. 10 - 10%)	
Internals	1 year

* Full warranty coverage is in effect for one year after installation. The pro-rated warranty covers the *tank only* during the 2nd through 10th year after installation. The amount covered decreases by 10% each year. (ie., 2nd year 90% covered, 3rd year 80% covered, etc.).

The foregoing warranties relate to the original consumer purchaser ("Purchaser") only. Sta-Rite shall have the option to repair or replace the defective product, at its sole discretion. Purchasers must pay all labor and shipping charges necessary to replace the product covered by this warranty. Requests for warranty service must be made through the installing dealer. This warranty shall not apply to any product that has been subject to negligence, misapplication, improper installation or maintenance, or other circumstances which are not in Sta-Rite's direct control.

This warranty sets forth Sta-Rite's sole obligation and Purchaser's exclusive remedy for defective products.

STA-RITE SHALL NOT BE LIABLE FOR ANY CONSEQUENTIAL, INCIDENTAL OR CONTINGENT DAMAGES WHATSOEVER.

THE FOREGOING WARRANTIES ARE EXCLUSIVE AND IN LIEU OF ALL OTHER EXPRESS WARRANTIES. IMPLIED WARRANTIES, INCLUDING BUT NOT LIMITED TO THE IMPLIED WARRANTIES OF MERCHANTABILITY AND FITNESS FOR A PARTICULAR PURPOSE, SHALL NOT EXTEND BEYOND THE DURATION OF THE APPLICABLE EXPRESS WARRANTIES PROVIDED HEREIN.

Some states do not allow the exclusion or limitation of incidental or consequential damages or limitations on how long an implied warranty lasts, so the above limitations or exclusion may not apply to you. This warranty gives you specific legal rights and you may also have other rights which vary from state to state.

Supersedes all previous publications.

Sta-Rite Industries, Inc.,
293 Wright St., Delavan, WI 53115

▲ **Retain Warranty Certificate (upper portion) in a safe and convenient location for your records.**

DETACH HERE: Fill out bottom portion completely and mail within 10 days of purchase/installation to:
▼ **Sta-Rite, Attn: Warranty Dept., 293 Wright St., Delavan, WI 53115**

STA-RITE®

Warranty Registration Card

Name

Address

City State Zip

Purchase Date

Product Purchased

☐ New installation ☐ Replacement

Type of Pool ☐ Inground ☐ Vinyl ☐ Fiberglass ☐ Gunite

Size of Pool

Years pool has been in service ☐ less than 1 ☐ 1-3 ☐ 3-5 ☐ 5-10

Purchased from:
Company name

Address

City State Zip

Please send me more information on these other products from Sta-Rite.

☐ Pumps ☐ Filters ☐ Automatic Pool Cleaners
☐ Maintenance Equipment ☐ Test Strips
☐ Heaters