PENTAIR

FILTERS

NOTES:

CLEAN & CLEAR® PLUS FILTERS

FIBERGLASS REINFORCED POLYPROPYLENE TANK

Featured Highlights

- Certified to NSF/ANSI Standard 50
- Large filter area for increased dirt capacity
- 1-1/2 in., 100% drain clean-out port
- Continuous High Flow™ Internal Air Relief *
- Base and plumbing kits available
- Injection molded tank
- Balanced hydraulic flow
- Tension Control™ Clamp
- 100% factory tested
- Black bulkhead unions
- High Flow manual air relief valve

TRADEGRADE

ecoselect®

Clean & Clear Plus Filter

Clean & Clear Plus Filters have a corrosion resistant injection molded filter tank featuring superior strength and reliability. The cartridge assembly uses four easy to clean, non-woven, polyester cartridges. Each filter is supplied with a bulkhead union set for easy installation.

Ordering Information

Product	Model	Effective Filtration Area (Sq. Ft.)	Flow Rate[2] (GPM Res)	Turnover Capacity (In Gallons) 8 Hour	10 Hour	12 Hour	Carton Qty.	Carton Wt. (Lbs.)
CLEAN & CLEAR PLUS FILTERS								
160310	CCP240	240	90	43,200	54,000	64,800	1	60
160340	CCP320 [1]	320	120	57,600	72,000	86,400	1	70
160301	CCP420 [1]	420	150	72,000	90,000	108,000	1	80
160332	CCP520 [1]	520	150	72,000	90,000	108,000	1	90
CLEAN & CLEAR PLUS REPLACEMENT CARTRIDGES								
179133	Model 240 Replacement Cartridges (4/pack)							
179134	Model 320 Replacement Cartridges (4/pack)							
179135	Model 420 Replacement Cartridges (4/pack)							
179136	Model 520 Replacement Cartridges (4/pack)							

[1] Certified to NSF/ANSI Standard 50.

[2] Residential rate .375 GPM per sq. ft. of filter area.

Certified to NSF/ANSI Standard 50

Dimension Table

Model	A Dim.	B Dim.
160310	37"	56"
160340	43"	62"
160301	49"	68"
160332	56"	74"

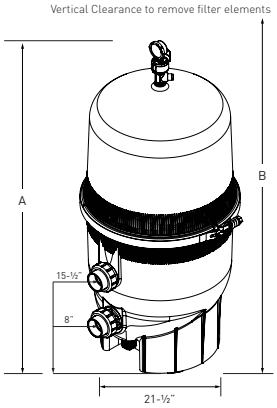

Dimensions and Performance

Note: Actual system flow will depend on plumbing size and other system components.

Note: Pentair Aquatic Systems does not recommend flow rates above 150 GPM.

* Integrated continuous High Flow internal air relief is operational only when there is unobstructed flow in the circulating system.

Note: Operating Limits – maximum continual operating pressure of 50 PSI. Pool/spa (bather) applications, maximum operating water temperature (internal filter) 104°F (40°C).

CALIFORNIA PROPOSITION 65 WARNING

WARNING: Cancer and Reproductive Harm.
AVERTISSEMENT: Peut Causer le Cancer et des Dommages au Système Reproducteur.
ADVERTENCIA: Cáncer y Daño Reproductivo.
www.p65warnings.ca.gov.

See page 374 for replacement parts.

CLEAN & CLEAR® FILTERS

FIBERGLASS REINFORCED POLYPROPYLENE TANK

TRADEGRADE

Clean & Clear Filter

Featured Highlights

- Certified to NSF/ANSI Standard 50
- Unionized connections
- Integrated continuous High Flow™ Internal Air Relief *
- Chemical resistant tank body
- Lock ring with spring-loaded safety latches
- Coreless cartridge for easy cleaning
- High Flow manual air relief valve
- 1 in. drain and wash out
- Single piece base and body design

The Clean & Clear Filter features a chemical resistant tank with no-tool servicing and a coreless cartridge for easier cleaning. All models are equipped with easy spin-on unions for plumbing hook-ups. These filters are certified to NSF/ANSI Standard 50 and available in 50, 75, 100, 150, and 200 square foot sizes.

CALIFORNIA PROPOSITION 65 WARNING

⚠ **WARNING:** Cancer and Reproductive Harm.
⚠ **AVERTISSEMENT:** Peut Causer le Cancer et des Dommages au Système Reproducteur.
⚠ **ADVERTENCIA:** Cáncer y Daño Reproductivo.
www.p65warnings.ca.gov.

Ordering Information

Product	Model	Effective Filtration Area (Sq. Ft.)	Flow Rate [1] (GPM Res)	Turnover Capacity (In Gallons) 8 Hour	10 Hour	12 Hour	Carton Qty.	Carton Wt. (Lbs.)
CLEAN & CLEAR FILTERS								
160314	CC 50	50	50	24,000	30,000	36,000	1	15
160315	CC 75	75	75	36,000	45,000	54,000	1	26
160316	CC 100	100	100	48,000	60,000	72,000	1	33
160317	CC 150	150	150	72,000	90,000	108,000	1	35
160318	CC 200	200	150	72,000	90,000	108,000	1	35

[1] One GPM per sq. ft. shown recommended flow rate .5 GPM per sq. ft.

Dimensions and Performance

Note: Actual system flow will depend on plumbing size and other system components.

Note: Pentair Aquatic Systems does not recommend flow rates above 150 GPM.

* Integrated continuous High Flow internal air relief is operational only when there is unobstructed flow in the circulating system.

Note: Operating Limits – maximum continual operating pressure of 50 PSI. Pool/spa (bather) applications, maximum operating water temperature (internal filter) 104°F (40°C).

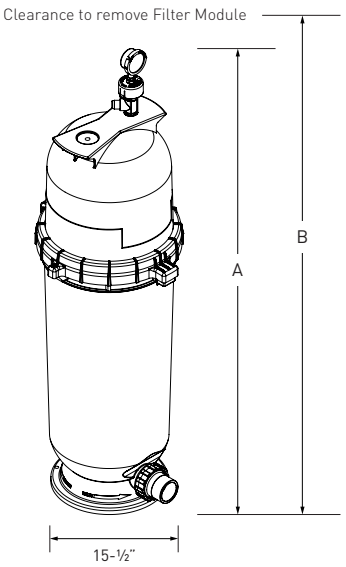

Certified to NSF/ANSI Standard 50

Dimension Table

Model	A Dim.	B Dim.
160314	18"	30"
160315	25-1/2"	39"
160316	33"	61"
160317	40-1/2"	76"
160318	40-1/2"	76"

See page 376 for replacement parts.

CLEAN & CLEAR® RP FILTERS

FIBERGLASS REINFORCED POLYPROPYLENE TANK

TRADEGRADE

eco select®

Featured Highlights

- Nearly 50% more energy efficient than other single cartridge filters
- Cartridge is easy to remove and rinse
- Low–force, quick–connect diamond–seal fastens easily with no tools required
- Chemical resistant tank body
- High Flow™ Manual Air Relief valve and continuous internal air relief
- 1-1/2 in. drain and washout for quick and convenient maintenance and winterization
- Easy turn Lock-ring

CALIFORNIA PROPOSITION 65 WARNING

⚠ **WARNING:** Cancer and Reproductive Harm.
⚠ **AVERTISSEMENT:** Peut Causer le Cancer et des Dommages au Système Reproducteur.
⚠ **ADVERTENCIA:** Cáncer y Daño Reproductivo.

www.p65warnings.ca.gov. P/N 28074-A

The Clean & Clear RP cartridge filter has a side entry port, which provides nearly 50% more efficiency than any other single cartridge filter available. Inside, the Clean & Clear RP has increased cartridge surface consistency to block and trap particles as small as 20 microns.

Ordering Information

Product	Model	Effective Filtration Area (Sq. Ft.)	Flow Rate[1] (GPM Res)	Turnover Capacity (In Gallons) 8 Hour	10 Hour	12 Hour	Carton Qty.	Carton Wt. (Lbs.)
CLEAN & CLEAR RP FILTERS								
160354	CCRP 100	100	100	48,000	60,000	72,000	1	33
160355	CCRP 150	150	150	72,000	90,000	108,000	1	35
160353	CCRP 200	200	150	72,000	90,000	108,000	1	35

[1] One GPM per sq. ft. shown recommended flow rate .5 GPM per sq. ft.

Certified to NSF/ANSI Standard 50

Clean & Clear RP		
Model	A Dim	B Dim
160354	33"	61"
160355	40.5"	76"
160353	40.5"	76"

Clearance to remove Filter Module

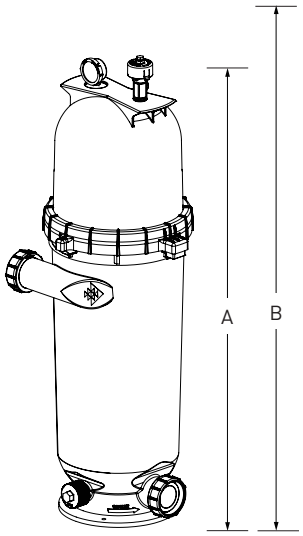

Dimensions and Performance

Note: Actual system flow will depend on plumbing size and other system components.

Note: Pentair Aquatic Systems does not recommend flow rates above 150 GPM.

* Integrated continuous High Flow internal air relief is operational only when there is unobstructed flow in the circulating system.

Note: Operating Limits – maximum continual operating pressure of 50 PSI. Pool/spa (bather) applications, maximum operating water temperature (internal filter) 104°F (40°C).

See page 375 for replacement parts.

DYNAMIC® FILTER SERIES

FOR SPAS, HOT TUBS AND SWIMMING POOLS

Dynamic Filter Series

Featured Highlights

- Free standing base optional on all but DSC models
- All cartridges are manufactured of the finest quality filter media

The Dynamic Filter Series line includes in-line, top load, safety flange lily pad and safety skim filters with automatic chemical dispensers and a host of features created for the leading spa manufacturers throughout the country.

Ordering Information

Product	Model	Description	Effective Filtration Area (Sq. Ft.)	Max GPM	Plumbing Size	Filter Dimensions		Carton Qty.	Carton Wt. (Lbs.)
						Height	Diameter		
DYNAMIC FILTER SERIES II TOP LOAD 2 in. HIGH FLOW FILTERS									
R172502J	RTL 25	Slip, 3 oz. cartridge	25	100	2 in. socket	18 in.	8-1/4 in.	4	27
R172503	RTL 75	Slip, 3 oz. cartridge	75	100	2 in. socket	25 in.	8-1/4 in.	4	30
R172504B	RTL 50	Slip, 3 oz. cartridge	50	100	2 in. socket	18 in.	8-1/4 in.	4	28
R172505	RTL 100	Slip, 3 oz. cartridge	100	100	2 in. socket	31-1/2 in.	8-1/4 in.	4	32
DYNAMIC FILTER SERIES III TOP LOAD 2 in. HIGH FLOW FILTERS WITH CHLORINE/BROMINE DISPENSERS									
R172523	RCF 25	Slip, 3 oz. cartridge	25	100	2 in. socket	18 in.	8-1/4 in.	4	28
R172535	RCF 50	Slip, 3 oz. cartridge	50	100	2 in. socket	18 in.	8-1/4 in.	4	30
R172503C	RCF 75	Slip, 3 oz. cartridge	75	100	2 in. socket	25 in.	8-1/4 in.	4	32
R172505C	RCF 100	Slip, 3 oz. cartridge	100	100	2 in. socket	31-1/2 in.	8-1/4 in.	4	34
DYNAMIC FILTER SERIES IV FLOATING LILY PAD WEIR FILTERS [1]									
R172545	DFM 50	Low profile (no weir) short basket	50	100	2 in. socket	17-1/2 in.	8-1/2 in.	4	26
R172664	DFML 25	Lily pad weir, lock ring mount	25	100	2 in. socket	19-3/8 in.	8-1/2 in.	4	27
R172666	DFML 25C	Compact, (not available with dispenser)	25	100	2 in. socket	12-7/8 in.	8-1/2 in.	4	22
R172668	DFML 25	With chlorine/bromine dispenser	25	100	2 in. socket	19-3/8 in.	8-1/2 in.	4	28
R172670	DFML 35	Lily pad weir, lock ring mount	35	100	2 in. socket	15-1/2 in.	8-1/2 in.	4	24
R172674	DFML 50	Lily pad weir, lock ring mount	50	100	2 in. socket	19-3/8 in.	8-1/2 in.	4	28
SAFETY FACE PLATE KIT [1]									
R172555WH		Safety face plate kit, white						4	5

CALIFORNIA PROPOSITION 65 WARNING

WARNING: Cancer and Reproductive Harm.
AVERTISSEMENT: Peut Causer le Cancer et des Dommages au Système Reproducteur.
ADVERTENCIA: Cáncer y Daño Reproductivo.
www.p65warnings.ca.gov.

DYNAMIC® FILTER SERIES (CONT'D)

ACCESSORIES FOR DYNAMIC FILTER SERIES II, III, IV, V		
R172452	Free standing base for Dynamic Filter Series II and III	Bulk
R172540	Chlorine/Bromine Dispenser for Dynamic Filter Series II and III	Bulk
R172560	Chlorine/Bromine Dispenser for Dynamic Filter Series IV Skim	Bulk
R172562	Chlorine/Bromine Dispenser w/ basket for DFM 50	Bulk
R172662	Chlorine/Bromine Dispenser w/ basket for DFML 25, 35, 50	Bulk

[1] All available in white. For sterling silver top add "SS" to order number. For dark grey add "DG."

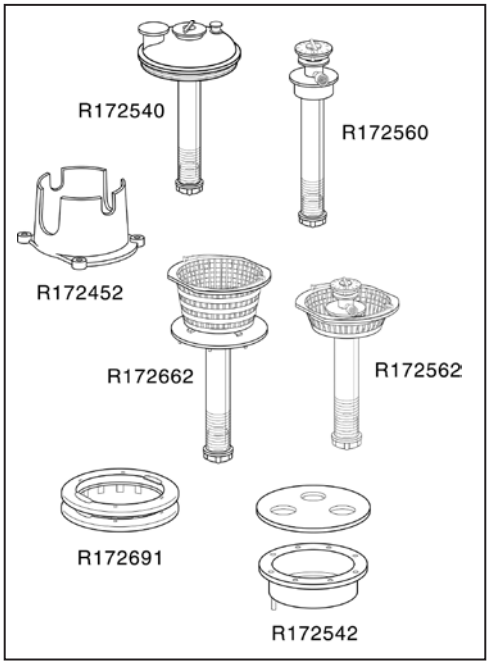

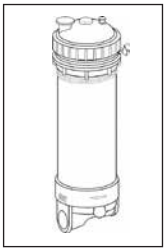
RLT-25

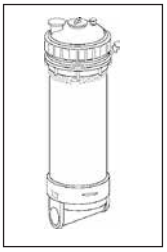
RCF-25

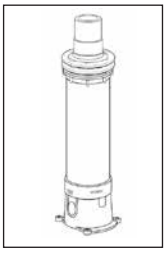
DMFL-25

See page 377–382 for replacement parts.

SYSTEM⁝3® MODULAR MEDIA FILTERS

SM SERIES FILTERS

STA-RITE®

TRADEGRADE

ecoselect®

System⁝3 Modular Media Filter
SM Series

Featured Highlights

- Typical Installation – Inground pools, inground hot tubs, and water features
- Quality Construction – Durable two-piece tank housing constructed of Dura-Glas™, Sta-Rite's industry leading glass reinforced composite resin
- Innovative Design – The innovative balanced flow design first introduced with the System⁝3 Mod Media is still the standard of the industry
- Low Maintenance – Complete media coverage combined with shallow pleats means greater dirt holding capabilities, resulting in longer filter cycles and less cleaning
- Quick Service – The shallow pleat design allows you to simply hose off the elements in a matter of minutes, making servicing a snap
- Dual Drain Plugs – Side plug available for plumbing to waste, while the bottom plug will drain entire filter

With the System⁝3 Modular Media Filter, Sta-Rite brings you the product that makes Ultra-Capacity Filtration™ a reality. No longer simply "cartridges," Sta-Rite's advanced technology has brought an entirely new class of filtration to the industry. Sta-Rite's modular media concept incorporates the latest in media science, perfectly balanced flow, and an integral manifold design: namely, Ultra-Capacity Filtration. This filtration concept puts totally care-free operation within reach of today's pool owners. Modular Filter Tanks allows for quick change of filter medias without changing the tank. Contemporary style and matte black finish looks attractive in any pool setting.

Ordering Information

Product	Effective Filter Area (Sq. Ft.)	Flow Rated[1] GPM (Sq. Ft.)	Turnover Capacity (In Gallons) (Flow Rate x 60 x Hours)			Tank Port Size	Carton Wt. (Lbs.)
			6 Hour	8 Hour	10 Hour		
SYSTEM⁝3 MODULAR MEDIA FILTER - SM SERIES							
S7M120	300	50–100	18–36,000	24–48,000	30–60,000	2 in.	120
S7M400 [1]	400	50–115	18–41,000	24–55,000	30–69,000	2 in.	125
S8M150 [1]	450	50–124	18–45,000	24–60,000	30–74,000	2 in.	147
S8M500 [1]	500	50–130	18–46,000	24–62,400	30–78,000	2 in.	150

[1] Based on NSF rated flow range of .333 GPM per square foot for the S7M120.

.288 GPM per square foot for the S7M400, .275 GPM for the S8M150 and .26 GPM per square foot for the S8M500.

Note: No backwash valve required.

Note: Operating Limits – maximum continual operating pressure of 50 PSI. Pool/spa (bather) applications, maximum operating water temperature (internal filter) 104°F (40°C).

CALIFORNIA PROPOSITION 65 WARNING

⚠ **WARNING:** Cancer and Reproductive Harm.
⚠ **AVERTISSEMENT:** Peut Causer le Cancer et des Dommages au Système Reproducteur.
⚠ **ADVERTENCIA:** Cáncer y Daño Reproductivo.

www.p65warnings.ca.gov. P/N 200174-A

SYSTEM:3® MODULAR MEDIA FILTERS (CONT'D)

SM SERIES FILTERS

Ordering Information

Product	Description	Carton Wt. (Lbs.)
	ACCESSORIES FOR SYSTEM:3 MODULAR MEDIA FILTER - SM SERIES	
PKG 188Z	Union x 2 in. Slip Adapter - Pkg. of 2	1
PKG 189	Union x 2 in. FPT Adapter - Pkg. of 2	1
77703-0100	Union x 1-1/2 in. FPT Adapter - Pkg. of 2	1
77703-0101	Union x 1-1/2 in. Slip Adapter - Pkg. of 2	1
25021-0200S	100 sq. ft. Inner Replacement Module for S7M120	9
25022-0201S	200 sq. ft. Outer Replacement Module for S7M120	21
25021-0223S	136 sq. ft. Inner Replacement Module for S7M400	11
25022-0224S	264 sq. ft. Outer Replacement Module for S7M400	24
25021-0202S	191 sq. ft. Inner Replacement Module for S8M150	18
25022-0203S	259 sq. ft. Outer Replacement Module for S8M150	27
25021-0224S	209 sq. ft. Inner Replacement Module for S8M500	19
25022-0225S	291 sq. ft. Outer Replacement Module for S8M500	28
25021-0021	Modular Media Conversion Kit - S7M120/S7M400 (Order Modules Separately)	4
25021-0025	Modular Media Conversion Kit - S8M150/S8M500 (Order Modules Separately)	5
170145	S7M120 Inner & Outer Replacement Cartridge Pack	35
170146	S7M400 Inner & Outer Replacement Cartridge Pack	35
170147	S8M150 Inner & Outer Replacement Cartridge Pack	50
170148	S8M500 Inner & Outer Replacement Cartridge Pack	50

Dimensions and Performance

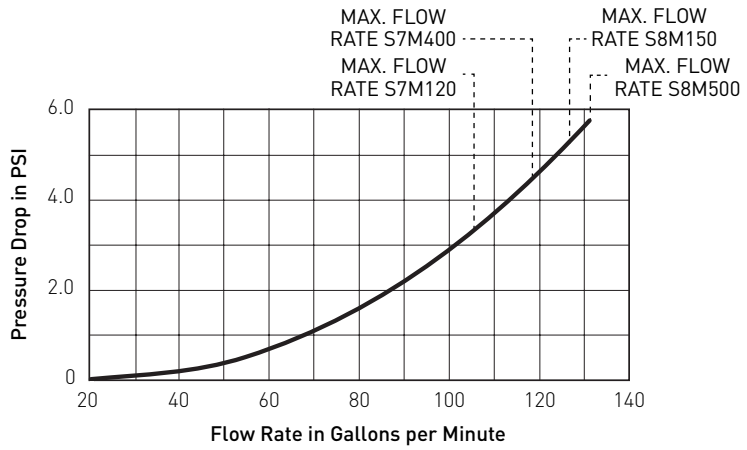

Certified to NSF/ANSI Standard 50

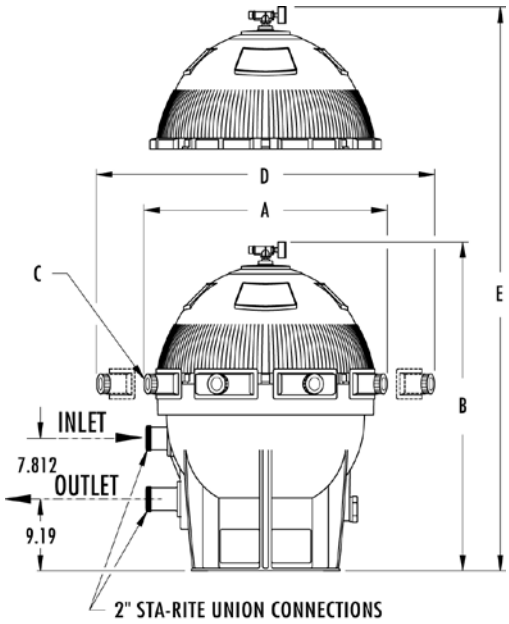

Catalog Number	DIMENSION A	B	C	D	E
S7M120/S7M400	28-1/2	42	7	36	50
S8M150/S8M500	32-1/2	42-1/4	8	40	50

A = width
B = height
C = number of clamps
D = area (width) needed to take off clamps
E = area (height) needed to remove top half of tank
All dimensions shown in inches.

See page 383 for replacement parts.

SYSTEM:2™ MODULAR MEDIA FILTERS

PLM SERIES FILTERS

STA-RITE

TRADEGRADE

System:2 Modular Media Filters
PLM Series

Featured Highlights

- Typical Installation – aboveground pools, inground pools, and inground hot tubs
- Quality Construction – Durable two-piece tank housing constructed of rugged ABS thermoplastic to ensure a long-lasting tank life
- Easy Access – Posi-Ring® Locking Ring provides fast access to tank internals
- Innovative Design – The innovative balanced flow design first introduced with the System : 3 Mod Media filter is now available in the smaller System:2 filter, virtually maintenance-free operation for pools of all sizes
- Low Maintenance – Complete media coverage combined with shallow pleats means greater dirt holding capabilities, resulting in longer filter cycles and less cleaning
- Large Drain Plug – Filter includes 2 in. NPT Drain ports, which are provided with reducer bushing and 1-1/2 in. drain plug

Sta-Rite's modular media filtration is the perfect match for both the inground and aboveground pool markets. Advances in media technology and balanced flow design provide dirt-loading capabilities up to 15 times greater than sand filters of equivalent size. Virtually maintenance-free operation for today's pool owner. The small diameter footprint makes the System:2 filter a perfect fit for new and retrofit installations.

Modular Filter Tanks allows for quick change of filter medias without changing the tank. Contemporary style and matte black finish looks attractive in any pool setting.

Ordering Information

Product	Effective Filter Area (Sq. Ft.)	Flow Rated[1] GPM (Sq. Ft.)	Turnover Capacity (In Gallons) (Flow Rate x 60 x Hours)			Tank Port Size	Carton Wt. (Lbs.)
			6 Hour	8 Hour	10 Hour		
SYSTEM:2 MODULAR MEDIA FILTER - PLM SERIES							
PLM100	100	38–100	14–36,000	18–48,000	23–60,000	2 in.	41
PLM125	125	47–125	17–45,000	22–60,000	28–75,000	2 in.	42
PLM150	150	56–150	20–54,000	27–72,000	34–90,000	2 in.	43
PLM175	175	66–150	24–54,000	31–72,000	39–90,000	2 in.	44
PLM200	200	75–150	27–54,000	36–72,000	45–90,000	2 in.	45
PLM300	300	113–150	41–54,000	54–72,000	68–90,000	2 in.	53

[1] Based on NSF recommended flow rate for commercial at .375 GPM per square foot.

Note: No backwash valve required.

Note: Operating Limits – maximum continual operating pressure of 50 PSI. Pool/spa (bather) applications, maximum operating water temperature (internal filter) 104°F (40°C).

CALIFORNIA PROPOSITION 65 WARNING

WARNING: Cancer and Reproductive Harm.
AVERTISSEMENT: Peut Causer le Cancer et des Dommages au Système Reproducteur.
ADVERTENCIA: Cáncer y Daño Reproductivo.
www.p65warnings.ca.gov.

SYSTEM:2™ MODULAR MEDIA FILTERS (CONT'D)

PLM SERIES FILTERS

Ordering Information

Product	Description	Carton Wt. (Lbs.)
	ACCESSORIES FOR SYSTEM:2 MODULAR MEDIA FILTER - PLM SERIES	
27002-0100S	100 Sq. Ft. Replacement Module for PLM100	11
27002-0125S	125 Sq. Ft. Replacement Module for PLM125	11.5
27002-0150S	150 Sq. Ft. Replacement Module for PLM150	12
27002-0175S	175 Sq. Ft. Replacement Module for PLM175	13
27002-0200S	200 Sq. Ft. Replacement Module for PLM200	14
27002-0300S	300 Sq. Ft. Replacement Module for PLM 300	19
U78-820P	2 in. x 1-1/2 in. Pipe Reducer Bushing	8 oz.
27001-0130S	Spring Check Valve	1

Dimensions and Performance

PLM300

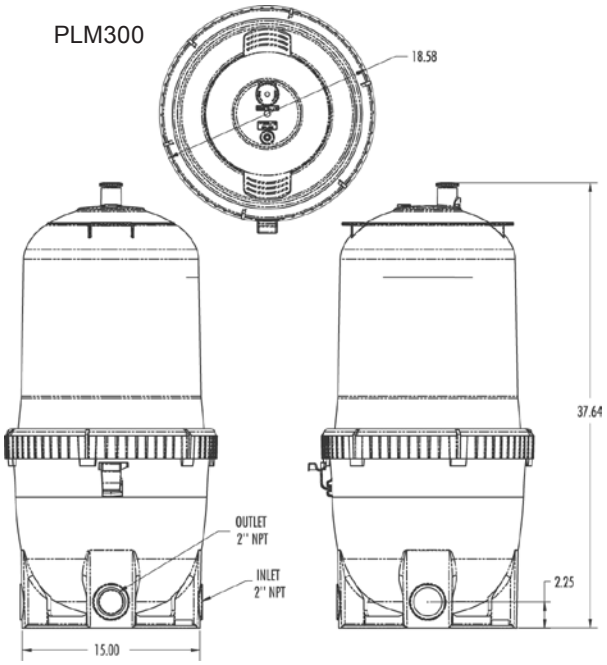

PLM100
PLM125
PLM150
PLM175
PLM200

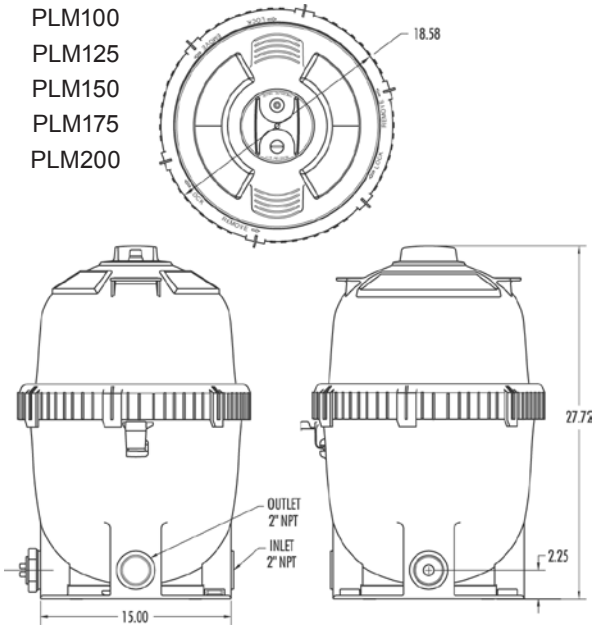

All dimensions shown in inches.

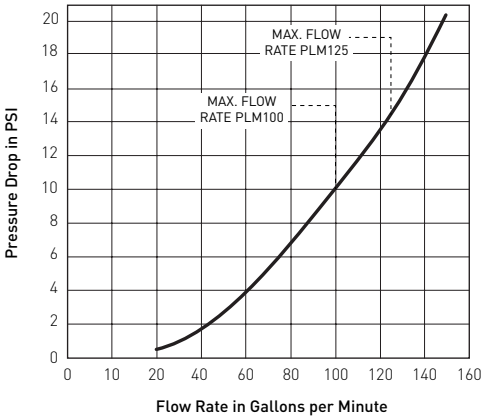

PLM100, PLM125, PLM150, PLM175, PLM200, PLM300

Certified to NSF/ANSI Standard 50

See page 384 for replacement parts.

POSI-CLEAR™ RP FILTERS

FIBERGLASS REINFORCED POLYPROPYLENE TANK

STA-RITE

TRADEGRADE

ecoselect®

Featured Highlights

- Certified to NSF/ANSI Standard 50
- Unionized connections
- Integrated continuous High Flow™ Internal Air Relief *
- Chemical resistant tank body
- Lock ring with spring-loaded safety latches
- Coreless cartridge for easy cleaning
- High Flow Manual Air Relief valve
- 1 in. drain and wash out
- Single piece base and body design

The Posi-Clear RP Filter features a chemical resistant tank with no-tool servicing and a coreless cartridge for easier cleaning. All models are equipped with easy spin-on unions for plumbing hook-ups. These filters are certified to NSF/ANSI Standard 50 and available in 100, 150, and 200 square foot sizes.

CALIFORNIA PROPOSITION 65 WARNING

⚠ **WARNING:** Cancer and Reproductive Harm.
⚠ **AVERTISSEMENT:** Peut Causer le Cancer et des Dommages au Système Reproducteur.
⚠ **ADVERTENCIA:** Cáncer y Daño Reproductivo.

www.p65warnings.ca.gov. P/N 200174-A

Ordering Information

Product	Model	Effective Filtration Area (Sq. Ft.)	Flow Rate [1] (GPM Res)	Turnover Capacity (In Gallons) 8 Hour	10 Hour	12 Hour	Carton Qty.	Carton Wt. (Lbs.)
POSI-CLEAR RP FILTERS								
160351	PXCRP100	100	100	48,000	60,000	72,000	1	33
160352	PXCRP150	150	150	72,000	90,000	108,000	1	35
160350	PXCRP200	200	150	72,000	90,000	108,000	1	35

[1] One GPM per sq. ft. shown recommended flow rate .5 GPM per sq. ft.

Dimensions and Performance

Certified to NSF/ANSI Standard 50

Posi-Clear RP		
Model	A Dim	B Dim
160351	33"	61"
160352	40.5"	76"
160350	40.5"	76"

Clearance to remove Filter Module

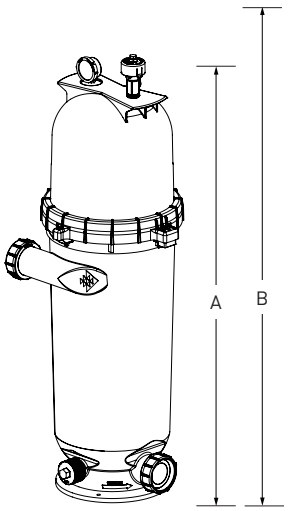

Note: Actual system flow will depend on plumbing size and other system components.

Note: Pentair Aquatic Systems does not recommend flow rates above 150 GPM.

* Integrated continuous High Flow internal air relief is operational only when there is unobstructed flow in the circulating system.

Note: Operating Limits – maximum continual operating pressure of 50 PSI. Pool/spa (bather) applications, maximum operating water temperature (internal filter) 104°F (40°C).

See page 385 for replacement parts.

FNS® PLUS FILTERS

FIBERGLASS REINFORCED POLYPROPYLENE MATERIAL, VERTICAL GRID, D.E.

TRADEGRADE

Featured Highlights

- Certified to NSF/ANSI Standard 50
- Superior strength
- Service-Ease™ Grid Pack
- Continuous High Flow™ Internal Air Relief *
- 100% factory tested
- Top-to-bottom backwash
- High Flow Manual Air Relief valve
- Tension Control™ Clamp
- 1-1/2 in. bottom clean out port
- 7-1/2 in. centerline bulkhead fittings

FNS Plus filters are fiberglass reinforced polypropylene of advanced chemical resistant materials for superior strength and reliability. The top manifold design features the Service-Ease grid pack for convenient one-at-a-time grid servicing.

Valve adapters not included.

CALIFORNIA PROPOSITION 65 WARNING

⚠ **WARNING:** Cancer and Reproductive Harm.
⚠ **AVERTISSEMENT:** Peut Causer le Cancer et des Dommages au Système Reproducteur.
⚠ **ADVERTENCIA:** Cáncer y Daño Reproductivo.
www.p65warnings.ca.gov.

FNS Plus Filter

Ordering Information

Product	Model	Effective Filtration Area (Sq. Ft.)	Flow Rate [1] (GPM)	Turnover Capacity (In Gallons) 8 Hour	10 Hour	12 Hour	D.E. Required (Lbs.)	Carton Qty.	Carton Wt. (Lbs.)
FNS PLUS FILTERS									
180006	FNSP24	24	48	23,040	28,800	34,560	2.4	1	60
180007	FNSP36	36	72	34,560	43,200	51,840	3.6	1	70
180008	FNSP48	48	96	46,080	57,600	69,120	4.8	1	80
180009	FNSP60	60	120	57,600	72,000	86,400	6.0	1	90
FNS PLUS VALVE OPTIONS [2]									
263079	2 in. PVC Slide valve w/o bulkhead fitting							1	3
261049	2 in. HiFlow valve, no plumbing							1	7
261142	2 in. HiFlow valve with plumbing for FNS, FNS Plus, NSP filters							1	11
261152	2 in. MPV, threaded for FNS, FNS Plus, NSP filters							1	10
263064	Push pull valve, 7-1/2 in. Center, Almond PVC							1	6
261177	1-1/2 in. MPV, threaded for FNS, FNS Plus, NSP filters							1	7
263081	Valve for D.E., inlet port on bottom, Pentair 2 in. unions glued on XF Valve							1	12
270100	Valve Adaptor Kit 2" Black							1	1
271096	Valve Adaptor Kit 2" White							1	1

FNS PLUS REPLACEMENT GRID ELEMENTS			
198080	FNSP24 Element Only Replacement Pack (7 large, 1 small)	198082	FNSP48 Element Only Replacement Pack (7 large, 1 small
198081	FNSP36 Element Only Replacement Pack (7 large, 1 small)	198083	FNSP60 Element Only Replacement Pack (7 large, 1 small)

[1] Flow rate is based on 2.0 GPM per sq. ft. of filter area. Actual system flow will depend on plumbing size and other system components.

[2] Valves must be purchased separately.

* Integrated continuous High Flow internal air relief is operational only when there is unobstructed flow in the circulating system.

Note: Operating Limits – maximum continual operating pressure of 50 PSI. Pool/spa (bather) applications, maximum operating water temperature (internal filter) 104°F (40°C).

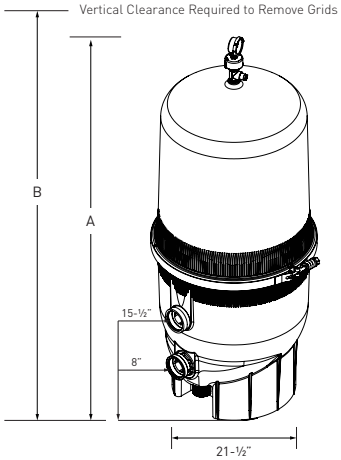

Dimensions and Performance

Certified to NSF/ANSI Standard 50

Dimension Table

Product	A Dim.	B Dim.
180006	37"	48"
180007	43"	62"
180008	49"	74"
180009	55"	86"

See pages 387 for replacement parts.

EASYCLEAN™ FILTERS

FIBERGLASS REINFORCED POLYPROPYLENE TANK

TRADEGRADE

EasyClean Filter

The EasyClean Filter features a chemical resistant tank with no-tool servicing and a cored cartridge for easier cleaning. All models are equipped with easy spin-on-unions for plumbing hook-ups.

CALIFORNIA PROPOSITION 65 WARNING

WARNING: Cancer and Reproductive Harm.
AVERTISSEMENT: Peut Causer le Cancer et des Dommages au Système Reproducteur.
ADVERTENCIA: Cáncer y Daño Reproductivo.
www.p65warnings.ca.gov.

Featured Highlights

- Unionized connections
- Integrated continuous High Flow™ Internal Air Relief *
- Chemical resistant tank body
- Lock ring with spring-loaded safety latches
- High Flow manual air relief valve
- 1 in. drain and wash out
- Single piece base and body design

Ordering Information

Product	Model	Effective Filtration Area (Sq. Ft.)	Vertical Clearance [1]	Flow Rate [2] (GPM)	D.E. Required	Turnover Capacity (In Gallons) 8 Hour	10 Hour	12 Hour	Carton Qty.	Carton Wt. (Lbs.)
EASYCLEAN FILTERS										
188614	EC60	15	39 in.	60	1.3	28,000	36,000	43,000	1	26
188615	EC90	30	76 in.	90	2.4	43,200	54,000	64,800	1	35

[1] Required clearance to remove filter elements.

[2] Maximum flow rate.

Dimensions and Performance

Note: Actual system flow will depend on plumbing size and other system components.

Note: Pentair Aquatic Systems does not recommend flow rates above 150 GPM.

* Integrated continuous High Flow internal air relief is operational only when there is unobstructed flow in the circulating system.

Note: Operating Limits – maximum continual operating pressure of 50 PSI. Pool/spa (bather) applications, maximum operating water temperature (internal filter) 104°F (40°C).

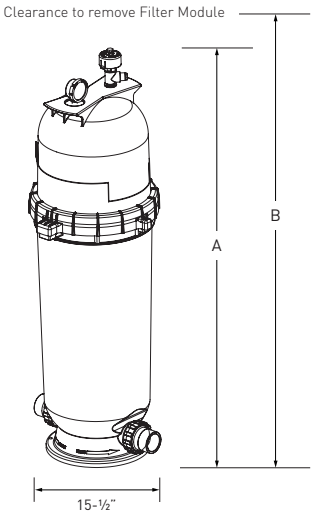

Model	A Dim	B Dim
188614	25-1/2 in.	39 in.
188615	40-1/2 in.	76 in.

See page 386 for replacement parts.

QUAD D.E.® FILTERS

CARTRIDGE STYLE FILTER

TRADEGRADE

eco select®

Featured Highlights

- Four large-capacity cartridges provide maximum filter surface area for greater dirt-trapping capacity and longer periods between cleanings
- Chemical resistant, fiberglass reinforced polypropylene tank for exceptional strength and long life
- Easily removable cartridge elements make maintenance fast and easy
- Water flows through the Quad D.E. Filter so efficiently that your pump will use less energy

The Highest Water Clarity with the Lowest Amount of Fuss. Quad D.E. combines the finest filtration available for the most sparkling clear water with the convenience and easy-cleaning features usually found only in a cartridge filter. Four easily accessible and removable D.E. cartridges simplify maintenance and save time.

CALIFORNIA PROPOSITION 65 WARNING

⚠ **WARNING:** Cancer and Reproductive Harm.
⚠ **AVERTISSEMENT:** Peut Causer le Cancer et des Dommages au Système Reproducteur.
⚠ **ADVERTENCIA:** Cáncer y Daño Reproductivo.
www.p65warnings.ca.gov. P/N 20874-A

Quad D.E. Filter

Ordering Information

Product	Model	Effective Filtration Area (Sq. Ft.)	Flow Rate (GPM)	Turnover Capacity (In Gallons) 8 Hour	10 Hour	12 Hour	D.E. Required (Lbs.)	Carton Qty.	Carton Wt. (Lbs.)
QUAD D.E. FILTERS									
188592	Quad D.E. 60	60	120	57,600	72,000	86,400	6.0	1	70
188593	Quad D.E. 80	80	160	76,800	96,000	115,200	8.0	1	80
188594	Quad D.E. 100	100	160	76,800	96,000	115,200	10.0	1	90
QUAD D.E. VALVE OPTIONS [1]									
261173	1-1/2 in. MPV, for Triton and Quad D.E. filters (SM 10-3)							1	3
263079	2 in. PVC Slide valve w/o plumbing, for D.E. & sand filters							1	7
261049	2 in. HiFlow valve, no plumbing							1	11
261050	2 in. HiFlow w/ plumbing, for Triton and Quad D.E. filters							1	10
261055	2 in. MPV, for Triton and Quad D.E. filters (SM 20-3)							1	5
263064	Push pull valve, 7-1/2 in. Center, Almond PVC							1	4
270100	Union Kit, 2 in. I.D. (For no valve assembly)							1	1
274426	Adapter Kit, 2-1/2 in. x 2 in.							1	1
263080	Valve for D.E., inlet port on bottom, Pentair 2 in. unions glued on XF Valve							1	12

[1] Valves must be purchased separately.

Certified to NSF/ANSI Standard 50

Product	A Dim.	B Dim.
188592	43"	62"
188593	49"	68"
188594	56"	74"

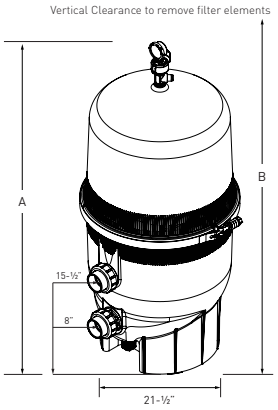

Dimensions and Performance

Note: Actual system flow will depend on plumbing size and other system components.

Note: Pentair Aquatic Systems does not recommend flow rates above 150 GPM.

* Integrated continuous High Flow internal air relief is operational only when there is unobstructed flow in the circulating system.

Note: Operating Limits – maximum continual operating pressure of 50 PSI. Pool/spa (bather) applications, maximum operating water temperature (internal filter) 104°F (40°C).

See page 388 for replacement parts.

SYSTEM:2™ MODULAR D.E. FILTERS

PLD SERIES FILTERS

STA-RITE

TRADEGRADE

System:2 Modular D.E. Filter
PLD Series

Featured Highlights

- Typical Installations – Inground pools and inground hot tubs
- Quality Construction – Durable two-piece tank housing constructed of rugged ABS thermoplastic to ensure a long-lasting tank life
- Easy Access – Posi-Ring® Closure provides fast access to tank internals
- Innovative Design – The innovative balanced flow design first introduced with the System : 3 Mod Media filter is now available in the smaller System:2 filter. Virtually maintenance-free operation for pools of all sizes
- Low Maintenance – Complete media coverage combined with shallow pleats means greater dirt holding capabilities, resulting in longer filter cycles and less cleaning
- Modular Filter Tanks – Allows for quick change of filter medias without changing the tank

Sta-Rite delivers the benefits of D.E. filtration in a variation of their proven modular media technology. A single replaceable grid delivers water of superior quality without the complex workings of other D.E. filters. Tank and one-piece grid design make this filter virtually maintenance-free. Contemporary style and matte black finish looks attractive in any pool setting. The small diameter footprint makes the System:2 filter a perfect fit for new and retrofit installations. Filter includes 2 in. NPT Drain ports, which are provided with reducer bushing and 1-1/2 in. drain plug.

Ordering Information

Product	Effective Filter Area (Sq. Ft.)	Flow Rated [1] at 1–2 GPM (per Sq. Ft.)	Turnover Capacity (Gallons) (Flow Rate x 60 x Hours)			Tank Port Size	D.E. [2] Required (Lbs.)	Carton Wt. (Lbs.)
			6 Hour	8 Hour	10 Hour			
SYSTEM:2 MODULAR D.E. FILTER - PLD SERIES								
PLD50	30	30–60	11–22,000	14–29,000	18–36,000	2 in.	6 [3]	37
PLD70	36	36–72	13–26,000	17–35,000	22–43,000	2 in.	4	38

[1] Based on NSF recommended flow rate for commercial at 1–2 GPM per square foot.

[2] Do not use more D.E. than shown here. Mixed results with D.E. alternatives.

[3] PLD50 requires more D.E. than the PLD70 because of precoat design and flow characteristics.

Note: Operating Limits – maximum continual operating pressure of 50 PSI. Pool/spa (bather) applications, maximum operating water temperature (internal filter) 104°F (40°C).

CALIFORNIA PROPOSITION 65 WARNING

⚠ **WARNING:** Cancer and Reproductive Harm.
⚠ **AVERTISSEMENT:** Peut Causer le Cancer et des Dommages au Système Reproducteur.
⚠ **ADVERTENCIA:** Cáncer y Daño Reproductivo.

www.p65warnings.ca.gov.

SYSTEM:2™ MODULAR D.E. FILTERS (CONT'D)

PLD SERIES FILTERS

Ordering Information

Product	Description	Carton Weight (Lbs.)
ACCESSORIES FOR SYSTEM:2 MODULAR D. E. FILTER - PLD SERIES		
27002-0030S	30 sq. ft. Replacement Module for PLD50	10
27002-0036S	36 sq. ft. Replacement Module for PLD70	10
U78-820P	2 in. x 1-1/2 in. Pipe Reducer Bushing	1
27001-0130S	Spring Check Valve	1

Dimensions and Performance

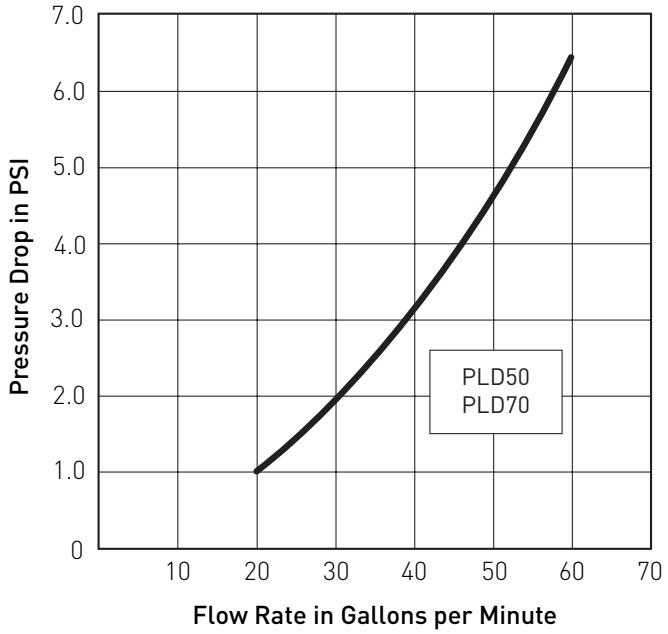

Certified to NSF/ANSI Standard 50

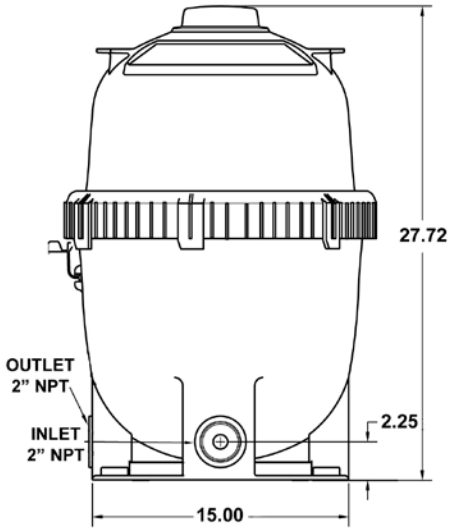

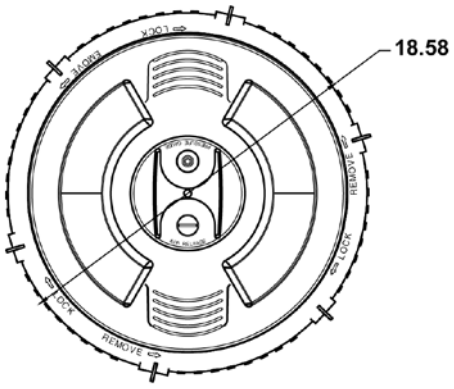

All dimensions shown in inches.

See page 390 for replacement parts.

SYSTEM:2™ MODULAR D.E. FILTERS

PLDE SERIES FILTERS

STA-RITE

TRADEGRADE

System:2 Modular D.E. Filters
PLDE Series

Featured Highlights

- Typical Installations – Inground pools and inground hot tubs
- Quality Construction – Durable two-piece tank housing constructed of rugged ABS thermoplastic to ensure a long-lasting tank life
- Easy Access – Posi-Ring® Locking Ring provides easy access to tank internals
- Innovative Design – The innovative, balanced-flow design – first introduced with the System⁝3 Mod Media filter – is now available in the smaller System:2 filter. Virtually maintenance-free operation for pools of all sizes.
- A Perfect Fit – The small diameter footprint makes the System:2 filter a perfect fit for new and retrofit installations
- Modular Filter Tanks – Allows for quick change of filter medias without changing the tank plumbing

Sta-Rite delivers the benefits of D.E. filtration in a variation of their proven modular media technology. A single replaceable grid delivers water of superior quality without the complex workings of other D.E. filters. This innovative one-piece design is fully backwashable and can be plumbed with or without a backwash valve. 2 in. union valves are included for installations electing not to use a backwash valve. For deep-down cleaning, simply remove the filter lid and hose off in place. No more hassle of tearing down the grid assembly for cleaning and servicing. Contemporary style and matte black finish looks attractive in any pool setting.

CALIFORNIA PROPOSITION 65 WARNING

WARNING: Cancer and Reproductive Harm.
AVERTISSEMENT: Peut Causer le Cancer et des Dommages au Système Reproducteur.
ADVERTENCIA: Cáncer y Daño Reproductivo.
www.p65warnings.ca.gov.

Ordering Information

Product	Effective Filter Area (Sq. Ft.)	Flow Rated [1] at 1–2 GPM (per Sq. Ft.)	Turnover Capacity (Gallons) (Flow Rate x 60 x Hours)			Tank Port Size	D.E.[2] Required (Lbs.)	Carton Wt. (Lbs.)
			6 Hour	8 Hour	10 Hour			
SYSTEM:2 MODULAR D.E. FILTER - PLDE SERIES								
PLDE36	36	36–72	13–26,000	17–35,000	22–43,000	2 in.	5.4	38
PLDE48	48	48–96	17–34,000	23–46,000	29–57,600	2 in.	7.2	46
PLDE VALVE OPTIONS [3]								
18202-0250	ABS 6-Position Valve with Union Connections – 1-1/2 in. Valve Port							5
18201-0300	ABS 6-Position Valve with Union Connections – 2 in. Valve Port							8
263053	VLV Push Pull, 7.81 in. center							12
262509	Valve with filter inlet port on top, no fittings, only valve							12

[1] Based on NSF recommended flow rate for commercial at 1–2 GPM per square foot.

[2] Do not use more D.E. than shown here. Mixed results with D.E. alternatives.

[3] Valves must be purchased separately.

Note: Operating Limits – maximum continual operating pressure of 50 PSI. Pool/spa (bather) applications, maximum operating water temperature (internal filter) 104°F (40°C).

SYSTEM:2™ MODULAR D.E. FILTERS (CONT'D)

PLDE SERIES FILTERS

Ordering Information

Product	Description	Carton Weight (Lbs.)
ACCESSORIES FOR SYSTEM:2 MODULAR D.E. FILTER - PLDE SERIES		
27002-0036S	36 sq. ft. Replacement Module for PLD50, PLDE36	10
27002-0048S	48 sq. ft. Replacement Module for PLDE48	11
PKG 188Z	2 in. Union Half x 2 in. Slip - Package of 2	1
77703-0101	2 in. Union Half x 1-1/2 in. Slip - Package of 2	1

Dimensions and Performance

PLDE SERIES FILTER PERFORMANCES				
PLDE36	35,000	36	54	5.4
PLDE48	46,000	48	72	7.2

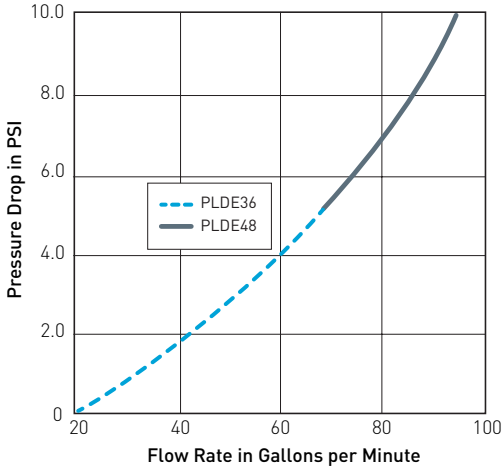

Certified to NSF/ANSI Standard 50

PLDE48

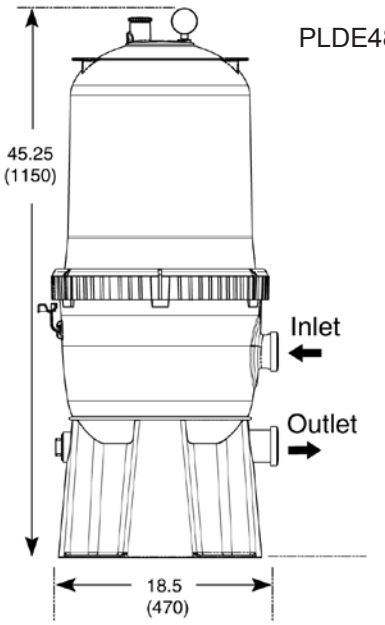

PLDE36

All dimensions shown in inches.

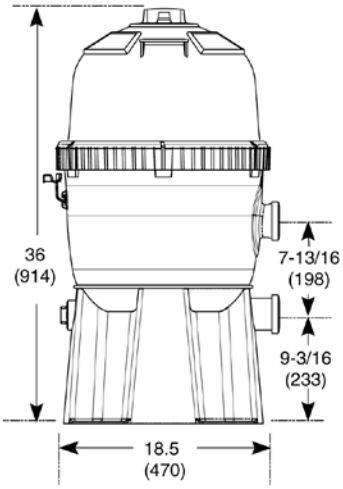

See page 391 for replacement parts.

SYSTEM:3® D.E. FILTERS

SD SERIES FILTERS

STA-RITE

TRADEGRADE

System:3 D.E. Filters
SD Series

Featured Highlights

- Typical Installations – Inground pools, inground hot tubs, and water features
- Quality Construction – Durable two-piece tank housing constructed of Dura-Glas™, Sta-Rite's industry leading glass-reinforced composite resin
- Easy Access – Posi-Lok™ Clamps provides easy access to tank internals
- Innovative Design – 2 in. plumbing throughout combined with Sta-Rite's rectangular grid system provides superior D.E. filtration
- Low Maintenance – Superior backwash capabilities means less manual cleaning of the grids
- Dual Drain Plugs – Side plug assembly includes 1-1/2 in. NPT port for direct discharge plumbing
- Sleek Looks – Contemporary style and matte black finish looks attractive in any pool setting

D.E. is historically the media of choice for the designers of some of the largest and most beautiful pools in the world. It is now more practical for all backyard pools as well. System:3 brings you the proven performance of Sta-Rite's diatomaceous earth media in an easy-to-operate filter. The greater cycle times and minimized maintenance of the System:3, coupled with Sta-Rite's superior grid system, gives you the finest D.E. filter available.

Ordering Information

Product	Effective Filter Area (Sq. Ft.)	Flow Rated[1] at 1–2 GPM (per Sq. Ft.)	Turnover Capacity (Gallons) (Flow Rate x 60 x Hours)			Tank Port Size	D.E.[2] Required (Lbs.)	Carton Wt. (Lbs.)
			6 Hour	8 Hour	10 Hour			
SYSTEM:3 D. E. FILTERS - SD SERIES								
S7D75	37	37–74	13–27,000	18–36,000	22–44,000	2 in.	3.7	112
S8D110	53	53–106	19–38,000	26–51,000	32–64,000	2 in.	5.3	136
SD SERIES VALVE OPTIONS[3]								
18202-0150	ABS 6-Position Valve with Union Connections – 1-1/2 in. Valve Port							5
18201-0200	ABS 6-Position Valve with Union Connection – 2 in. Valve Port							8
263053	VLV Push Pull, 7.81 in. center							12
262508	Sta-Rite version for System 3 D.E. and Sand, inlet on bottom, with Sta-Rite offset adapters glued on							12
ACCESSORIES FOR SYSTEM:3 MODULAR D. E. FILTER - SD SERIES								
25021-1021	DE Conversion Kit – S7D75 - Grid Assembly and Valve Sold separately (new valve may be required)							18
25021-1025	DE Conversion Kit – S8D110 - Grid Assembly and Valve Sold separately (new valve may be required)							20

[1] Based on NSF recommended flow rate for commercial at 1–2 GPM per square foot.

[2] Do not use more D.E. than shown here. Mixed results with D.E. alternatives.

[3] Valves must be purchased separately.

Note: Operating Limits – maximum continual operating pressure of 50 PSI. Pool/spa (bather) applications, maximum operating water temperature (internal filter) 104°F (40°C).

CALIFORNIA PROPOSITION 65 WARNING

⚠ **WARNING:** Cancer and Reproductive Harm.
⚠ **AVERTISSEMENT:** Peut Causer le Cancer et des Dommages au Système Reproducteur.
⚠ **ADVERTENCIA:** Cáncer y Daño Reproductivo.
www.p65warnings.ca.gov. P/N 200174.A

SYSTEM 3® D.E. FILTERS (CONT'D)

SD SERIES FILTERS

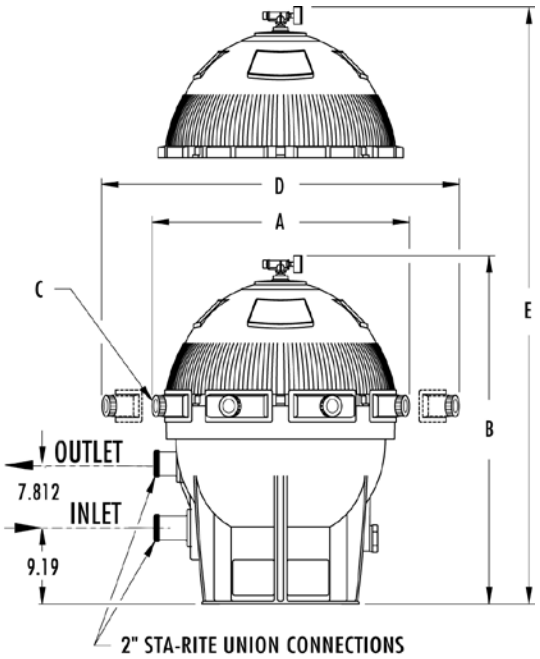

	DIMENSION				
Catalog Number	A	B	C	D	E
S7D75	28-1/2	42	7	36	50
S8D110	32-1/2	42-1/4	8	40	50

A = width
B = height
C = number of clamps
D = area (width) needed to take off clamps
E = area (height) needed to remove top half of tank
All dimensions shown in inches.

Dimensions and Performance

Certified to NSF/ANSI Standard 50

18202-0150
1-1/2 in. MULTIPORT VALVE

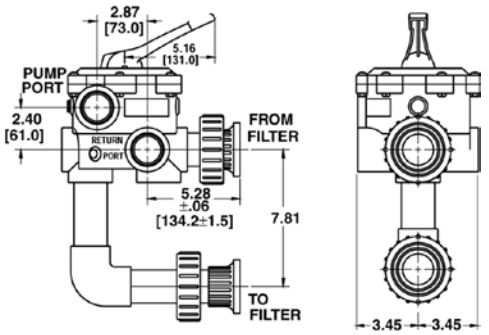

18201-0200
2 in. MULTIPORT VALVE

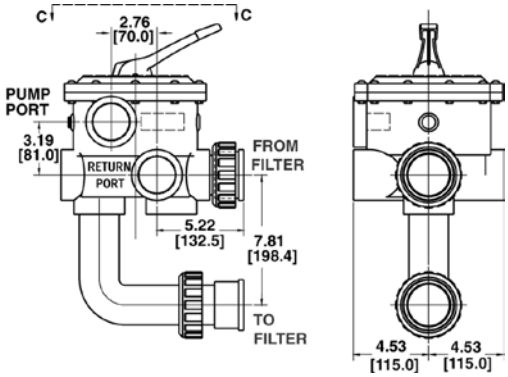

All dimensions shown in inches.

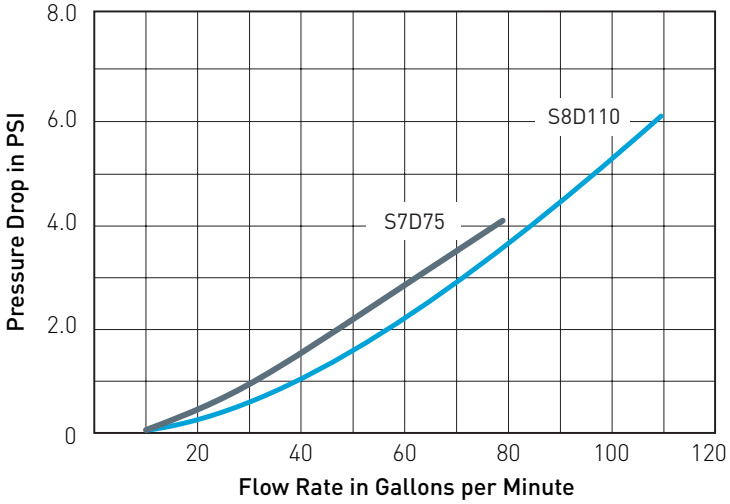

See page 392–393 for replacement parts.

SYSTEM⁝3® MODULAR D.E. FILTERS

SMD SERIES FILTERS

STA-RITE®

TRADEGRADE

ecoselect®

System⁝3 Modular D.E. Filters
SMD Series

Featured Highlights

- Typical Installations – Inground pools, inground hot tubs, and water features
- Quality Construction – Durable two-piece tank housing constructed of Dura-Glas™, Sta-Rite's industry leading glass-reinforced composite resin
- Easy Access – Posi-Lok™ Clamps provides easy access to tank internals
- Modular Filter Tanks – Allows for quick change of filter medias without changing the tank
- Low Maintenance – Superior backwash capabilities means less manual cleaning of the grids
- Dual Drain Plugs – Side plug assembly includes 1-1/2 in. NPT port for direct discharge plumbing
- Sleek Looks – Contemporary style and matte black finish looks attractive in any pool setting

Sta-Rite is proud to bring you the proven technology of System⁝3 Modular Media into the world of D.E. With it's perfectly balanced flow and integral manifold design, the System⁝3 Modular D.E. filter brings pool filtration to new heights. Available in 2 sizes, 60 and 72 sq. ft., System⁝3 Modular Media D.E. filtration will bring years of sparkling clear water to your customer's pool or spa. For cleaning, simply remove filter lid and hose off in place. No more hassle of tearing down the grid assembly for cleaning and servicing. The balanced flow design allows for a constant D.E. cake on the entire module, assuring full optimization of the module and longer cycles between cleanings.

Ordering Information

Product	Effective Filter Area (Sq. Ft.)	Flow Rated[1] at 1–2 GPM (per Sq. Ft.)	Turnover Capacity (Gallons) (Flow Rate x 60 x Hours)			Tank Port Size	D.E. Required (Lbs.)	Carton Wt. (Lbs.)
			6 Hour	8 Hour	10 Hour			
SYSTEM⁝3 MODULAR D.E. FILTERS - SMD SERIES								
S7MD60	60	60–120	21–32,400	28–43,200	36–54,000	2 in.	9	115
S7MD72	72	72–144	25–38,880	34–51,800	43–64,800	2 in.	11	117
SMD SERIES VALVE OPTIONS								
18201-0300	ABS 6-Position Valve with Union Connections – 2 in. Port Valve							8
263053	VLV Push Pull, 7.81 in. center							12
ACCESSORIES FOR SYSTEM⁝3 MODULAR D.E. FILTER - SMD SERIES								
25023-0160S	60 sq. ft. Replacement D.E. Element							20
25023-0172S	72 sq. ft. Replacement D.E. Element							21
PKG 188Z	Union x 2 in. Slip Adapter – Pkg. of 2							1
PKG 189	Union x 2 in. FPT Adapter – Pkg. of 2							1
23910-1100S	System 3 Modular D.E. Conversion Kit (replacement element required; new valve may be required)							3

[1] Based on NSF recommended flow rate for commercial at 1–2 GPM per square foot.

Note: Operating Limits – maximum continual operating pressure of 50 PSI. Maximum operating water temperature (internal filter) 104°F (40°C).

CALIFORNIA PROPOSITION 65 WARNING

⚠ **WARNING:** Cancer and Reproductive Harm.
⚠ **AVERTISSEMENT:** Peut Causer le Cancer et des Dommages au Système Reproducteur.
⚠ **ADVERTENCIA:** Cáncer y Daño Reproductivo.
www.p65warnings.ca.gov.

SYSTEM 3® MODULAR D.E. FILTERS (CONT'D)

SMD SERIES FILTERS

Dimensions and Performance

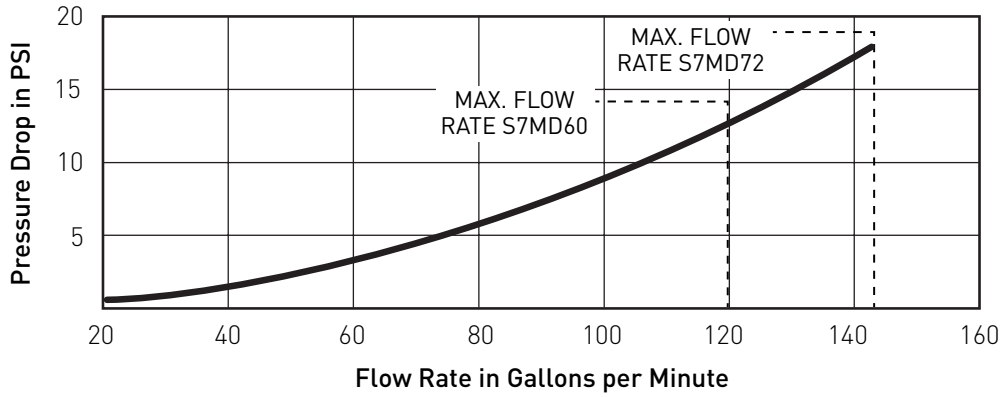

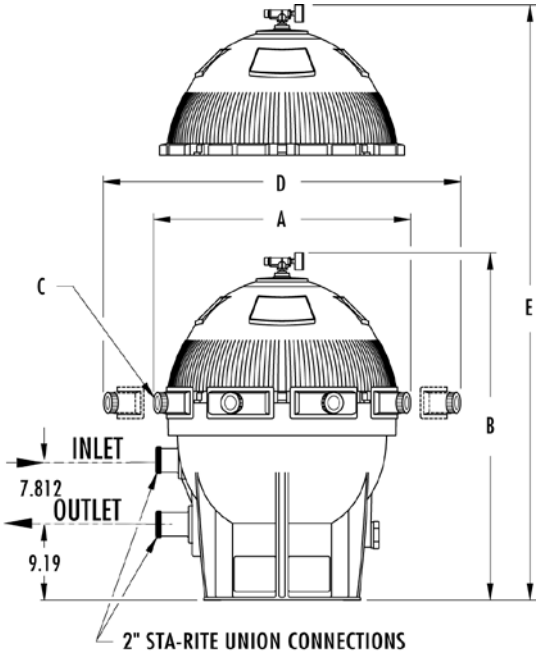

18201-0300
2 in. MULTIPORT VALVE

Certified to NSF/ANSI Standard 50

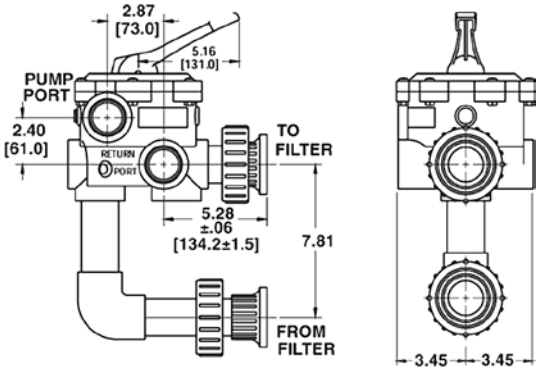

18201-0300
2 in. SLIDE VALVE

	DIMENSION				
Catalog Number	A	B	C	D	E
S7MD60	28-1/2	42	7	36	50
S7MD72	28-1/2	42	7	36	50

A = width
B = height
C = number of clamps
D = area (width) needed to take off clamps
E = area (height) needed to remove top half of tank
All dimensions shown in inches.

See page 394 for replacement parts.

SMBW 4000 SERIES™ FILTERS

SHEET MOLDED FIBERGLASS TANK WITH BACKWASH VALVES

TRADEGRADE

SMBW 4000 Series Filter

Featured Highlights

- Maximum Operating Pressure 50 psi
- Corrosion-resistant 20 in. diameter fiberglass filter tank for strength and durability
- Spiro-Mite grid design provides high efficiency filtration and longer filter cycles
- Innovative clamp ring design is proven to be strong and reliable. It allows for quick and easy access to internal components
- 2 in. plumbing connections provide maximum flow

Sheet molded fiberglass tank, 2 in. threaded female connections with PPO Resin rotary backwash valve.

CALIFORNIA PROPOSITION 65 WARNING

⚠ **WARNING:** Cancer and Reproductive Harm.
⚠ **AVERTISSEMENT:** Peut Causer le Cancer et des Dommages au Système Reproducteur.
⚠ **ADVERTENCIA:** Cáncer y Daño Reproductivo.
www.p65warnings.ca.gov. P/N 200174-A

Ordering Information

Product	Model	Effective Filtration Area (Sq. Ft.)	Flow Rate (GPM)	Turnover Capacity (In Gallons)			D.E. Required (Lbs.)	Carton Qty.	Carton Wt. (Lbs.)
				8 Hour	10 Hour	12 Hour			
SMBW 4000 FILTERS WITH BACKWASH VALVE									
011555	SMBW 4048	47	94	45,120	56,400	67,680	4.8	1	89
147411	SMBW 4060	58	116	55,680	69,600	83,520	6.0	1	110

Note: Operating Limits – maximum continual operating pressure of 50 PSI. Pool/spa (bather) applications, maximum operating water temperature (internal filter) 104°F (40°C).

Dimensions and Performance

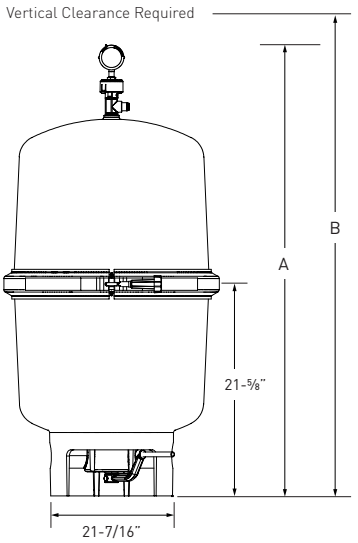

DIMENSION TABLE

MODEL	A DIM.	B DIM.
SMBW 4048	42-7/16 in.	52 in.
SMBW 4060	48-7/16 in.	58 in.

See page 389 for replacement parts.

D.E. SEPARATION TANK 100

Featured Highlights

Quarter turn locking-ring provides quick and easy access for removing debris bag. Offers 2 x 2-1/2 inch unionized fittings. Debris bag holds up to 10 lbs of D.E.

CALIFORNIA PROPOSITION 65 WARNING

WARNING: Cancer and Reproductive Harm.
AVERTISSEMENT: Peut Causer le Cancer et des Dommages au Système Reproducteur.
ADVERTENCIA: Cáncer y Daño Reproductivo.
www.p65warnings.ca.gov.

Separation Tank 100

Ordering Information

Product	Pipe For Filters	Connections	Carton Wt. (Lbs.)
D.E. SEPARATION TANK			
300005	100 sq. ft.	2 x 2-1/2 in. SLIP	30

Dimensions and Performance

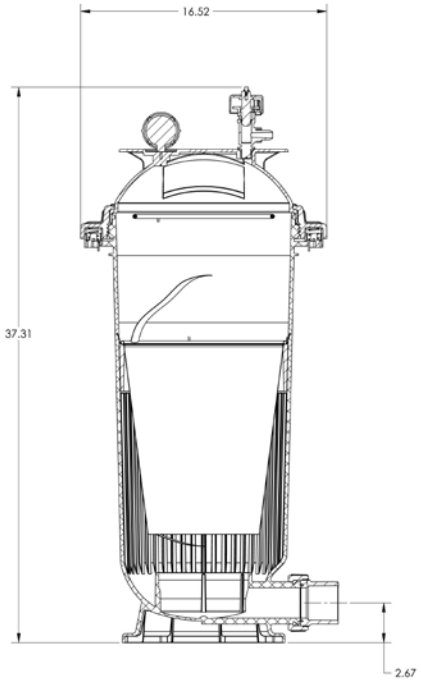

SECTION A-A

See page 407 for replacement parts.

TRITON® II, TAGELUS® & SAND DOLLAR® FILTERS

WITH CLEARPRO TECHNOLOGY®

TRADEGRADE

TR60

Triton II Filter
(Unions not included)

TA60D

Tagelus Filter

SD80

Sand Dollar Filter

Featured Highlights

- All the same, great features of the Triton II, Tagelus and Sand Dollar Filters
- Provides superior water quality
- Max water temperature for Sand Dollar is 95° F

CALIFORNIA PROPOSITION 65 WARNING

⚠ **WARNING:** Cancer and Reproductive Harm.
⚠ **AVERTISSEMENT:** Peut Causer le Cancer et des Dommages au Système Reproducteur.
⚠ **ADVERTENCIA:** Cáncer y Daño Reproductivo.

www.p65warnings.ca.gov. PN 200174 A

Ordering Information

Product	Model	Effective Filtration Area (Sq. Ft.)	Max. Press (PSI)	Flow Rate (GPM)	Turnover Capacity (In Gal.) 8 Hour	10 Hour	12 Hour	Filter Media Pea Gravel Required (Lbs.)	Sand Req'd (Lbs.)	All Sand Req'd (Lbs.)	Ctn Qty.	Ctn Wt. (Lbs.)
TRITON II SAND FILTERS												
140212	TR 60	3.14	50	63	30,240	37,800	45,360	75	250	325	1	40
TAGELUS FILTERS												
145201	TA 60D	3.1	50	60	28,800	36,000	43,200	N/A	N/A	325	1	30
145389*	TA 60D	3.1	50	60	28,800	36,000	43,200	N/A	N/A	325	1	30
SAND DOLLAR FILTERS												
145300	SD 80	3.5	50	75	36,000	45,000	54,000	N/A	N/A	350	1	76
145388*	SD80	3.5	50	75	36,000	45,000	54,000	N/A	N/A	350	1	76
145390	CFII26 w 2" Hybrid Vlv											

KITS			
159028	Kit ClearPro TR100	159032	Kit ClearPro TR140C3
159029	Kit ClearPro TR100C	159034	Kit ClearPro TR140
159030	Kit ClearPro TR140C	159035	Kit ClearPro TA100
159031	Kit ClearPro TR100C3		

* with 2 in. valve

Dimensions and Performance

Triton II Side Mount Filter

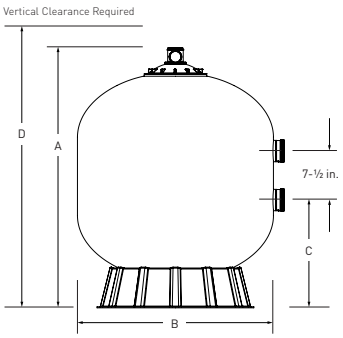

A = 35-1/2 in.
B = 24-1/2 in.
C = 13-5/8 in.
D = 37-1/2 in.

Tagelus Top Mount Filter

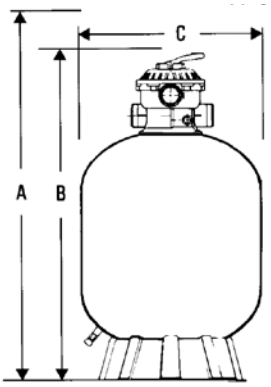

A = 57 in.
B = 42-1/2 in.
C = 24-1/2 in.

Sand Dollar Top Mount Filter

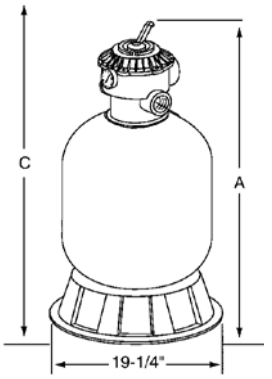

A = 48-3/4 in.
C = 65-3/4 in.

SAND DOLLAR® TOP MOUNT FILTER

THERMOPLASTIC TANK WITH CLAMP STYLE MULTIPORT VALVE

TRADEGRADE

Featured Highlights

- Six-position, top-mounted multiport valve
- Combination water and sand drain makes servicing and winterizing fast and easy

The one piece Sand Dollar filter features a clamp style, six-position multiport valve. Special lateral design provides superior flow characteristics and long filter cycles for economical operation.

* Max water temperature for Sand Dollar 95° F

CALIFORNIA PROPOSITION 65 WARNING

⚠ **WARNING:** Cancer and Reproductive Harm.
⚠ **AVERTISSEMENT:** Peut Causer le Cancer et des Dommages au Système Reproducteur.
⚠ **ADVERTENCIA:** Cáncer y Daño Reproductivo.
www.p65warnings.ca.gov. P/N 200174.A

SD80
with 2 in. valve

Sand Dollar Top Mount Filter

Ordering Information

Product	Model	Effective Filtration Area (Sq. Ft.)	Max. Pressure (PSI)	Flow Rate (GPM)	Turnover Capacity (In Gallons)			All Sand Required (Lbs.)	Carton Qty.	Carton Wt. (Lbs.)
					8 Hour	10 Hour	12 Hour			
SAND DOLLAR FILTERS										
145315	SD 35	1.4	30	35	16,800	21,000	25,200	100	1	22
145320	SD 40	1.8	35	40	19,200	24,000	28,800	150	1	24
145322	SD 60	2.3	40	60	28,800	36,000	43,200	250	1	28
145367	SD 70	3.15	50	70	33,600	42,000	54,000	300	1	58
145333	SD80	3.5	50	75	36,000	45,000	54,000	350	1	76
145386*	SD80 2 in.	3.5	50	75	36,000	45,000	54,000	350	1	76

* with 2 in. valve

Dimensions and Performance

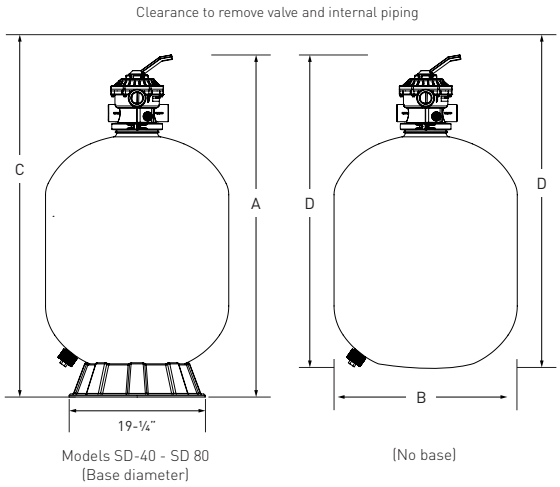

DIMENSION TABLE

Model	A DIM.	B DIM.	C DIM.	D DIM.	E DIM.
SD 35	33-1/2 in.	16-1/2 in.	37 in.	30-3/4 in.	34-1/4 in.
SD 40	37-3/4 in.	19-1/2 in.	46-1/4 in.	35 in.	43-1/2 in.
SD 60	43-3/4 in.	22-1/2 in.	52-1/2 in.	40-3/4 in.	49-1/4 in.
SD 70	46-1/4 in.	24 in.	57 in.	43-1/4 in.	53-3/4 in.
SD 80	48-3/4 in.	26 in.	65-3/4 in.	45-5/8 in.	62-1/2 in.

See page 395–396 for replacement parts.

TAGELUS® TOP MOUNT FILTER

FIBERGLASS TANK WITH MULTIPORT VALVE, CLAMP STYLE

TRADEGRADE

TA60D
with 2 in. valve

Tagelus Top Mount Filter
(Unions sold separately)

Featured Highlights

- Special lateral design provides superior flow characteristics and long filter cycles for economical operation
- Maximum Operating Pressure 50 psi
- Combination water and sand drain makes servicing and winterizing fast and easy
- 40, 50, and 60D models standard with plastic clamp

Our process creates a one-piece, fiberglass reinforced tank with superior strength and durability. Tagelus filters are equipped with a six-position, clamp style, top-mounted multiport valve.

CALIFORNIA PROPOSITION 65 WARNING

WARNING: Cancer and Reproductive Harm.
AVERTISSEMENT: Peut Causer le Cancer et des Dommages au Système Reproducteur.
ADVERTENCIA: Cáncer y Daño Reproductivo.
www.p65warnings.ca.gov.

Ordering Information

Product	Model	Effective Filtration Area (Sq. Ft.)	Flow Rate (GPM)	Turnover Capacity (In Gallons)			All Sand Required (Lbs.)	Carton Qty.	Carton Wt. (Lbs.)
				8 Hour	10 Hour	12 Hour			
TAGELUS FILTERS									
144126	TA 40D	1.8	40	19,200	24,000	28,800	175	1	30
145241	TA 60D	3.1	60	28,800	36,000	43,200	325	1	38
145240	TA 100D	4.9	100	48,000	60,000	72,000	600	1	78
145385*	TA60D(2)	3.1	60	28,800	36,000	43,200	325	1	38

Note: Operating Limits – maximum continual operating pressure of 50 PSI. Maximum operating water temperature (internal filter) 104°F (40°C).

Unions shown in product image above sold separately.

* with 2 in. valve

Dimensions and Performance

DIMENSION TABLE

MODEL	A. DIM.	B DIM.	C DIM.
TA 40D	47 in.	37 in.	19-1/2 in.
TA 60D	57 in.	42-1/2 in.	24-1/2 in.
TA 100D	65-1/2 in.	47-1/4 in.	30-1/2 in.

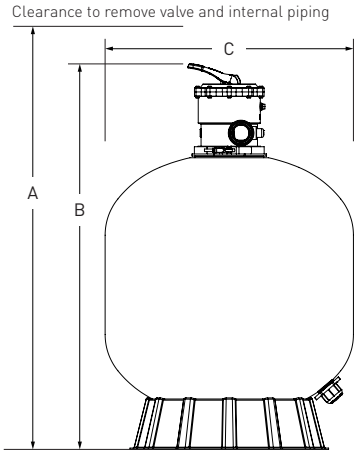

See page 397–398 for replacement parts.

TRITON® II SIDE MOUNT FILTERS

FIBERGLASS SAND FILTER WITHOUT VALVES

TRADEGRADE

Featured Highlights

- Heavy-duty closure provides easy inspection, and features an easy-to-read pressure gauge with air relief valve
- Swing-away diffuser allows instant access to sand and all internal parts
- All internal parts are threaded for ease of service
- Internal air bleed
- Bulkhead connectors are threaded for easy installation and service
- Combination sand and water drain makes servicing and winterizing fast and easy
- Maximum Operating Pressure 50 psi

CALIFORNIA PROPOSITION 65 WARNING

WARNING: Cancer and Reproductive Harm.
AVERTISSEMENT: Peut Causer le Cancer et des Dommages au Système Reproducteur.
ADVERTENCIA: Cáncer y Daño Reproductivo.
www.p65warnings.ca.gov. P/N 20174.A

Triton II Side Mount Filter
(Unions not included)

The original and still the industry standard. Our process creates a one-piece, fiberglass reinforced tank with UV resistant surface finish for years of unequaled strength and durability. This method locks in fiberglass, preventing fibers from "blooming" under harsh conditions.

Ordering Information

Product	Model	Effective Filtration Area (Sq. Ft.)	Flow Rate (GPM Comm)	Turnover Capacity (In Gal.) 8 Hour	10 Hour	12 Hour	Filter Media Pea Gravel Req'd (Lbs.)	Sand Req'd (Lbs.)	All Sand Req'd (Lbs.)	Ctn Qty.	Ctn Wt. (Lbs.)
TRITON II SAND FILTERS											
140236	TR 40	1.92	38	18,240	22,800	27,360	50	125	175	1	25
140264	TR 60	3.14	63	30,240	37,800	45,360	75	250	325	1	40
140210	TR 100	4.91	74	35,520	44,400	53,280	150	450	600	1	65
140243	TR 140	7.06	106	50,880	63,600	76,320	275	650	925	1	75
TRITON II VALVE OPTIONS [1]											
261173	1-1/2 in. MPV, for sand filters (SM 10-3)									1	6
263079	2 in. PVC Slide valve w/o plumbing, for D.E. & sand filters									1	3
261049	2 in. HiFlow valve, no plumbing									1	7
261050	2 in. HiFlow w/ plumbing, for sand filters									1	11
261055	2 in. MPV, for sand filters (SM 20-3)									1	10
263064	Push Pull 7-1/2 in. Center Valve, Almond PVC									1	5
263080	Valve for Sand and Quad D.E., inlet port on top, Pentair 2 in. unions glued on XF Valve									1	10

[1] Valves must be purchased separately.

Note: Operating Limits – maximum continual operating pressure of 50 PSI. Maximum operating water temperature (internal filter) 104°F (40°C).

See page 399–400 for replacement parts.

TRITON® II SIDE MOUNT FILTERS (CONT'D)

FIBERGLASS SAND FILTER WITHOUT VALVES

Dimensions and Performance

Certified to NSF/ANSI Standard 50

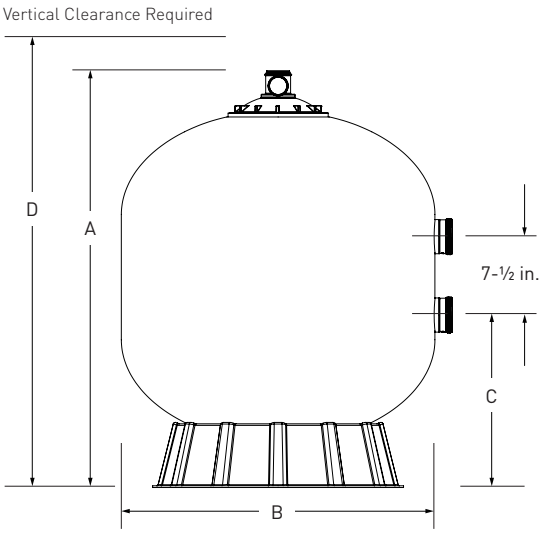

DIMENSION TABLE

MODEL	A. DIM.	B DIM.	C DIM.	D DIM.
TR 40	30-1/2 in.	19-1/2 in.	10-3/4 in.	32-1/2 in.
TR 50	34-3/4 in.	21-1/2 in.	11-7/8 in.	36-3/4 in.
TR 60	35-1/2 in.	24-1/2 in.	13-5/8 in.	37-1/2 in.
TR 100	39-3/4 in.	30-1/2 in.	16-1/4 in.	41-3/4 in.
TR 140	45-1/4 in.	36-1/2 in.	18-3/4 in.	47-1/4 in.

See pages 399–400 for replacement parts.

CRISTAL-FLO™ II TOP-MOUNT FILTERS

HIGH RATE SAND FILTERS

STA-RITE®
TRADEGRADE

Featured Highlights

- Quality Construction – Durable one-piece extra-thick molded polyethylene tank
- 6-Position Valve – Allows you to perform all necessary water movement functions.
- Large Drain Plug – Large drain plug is easy to get at for removing and installing by hand or with tools if required
- Sleek Looks – Contemporary style with a textured black finish that provides superior performance in all weather conditions
- Innovative - Integrated continuous High Flow™ Internal Air Relief *

Cristal-Flo II
Top-Mount Filters

CALIFORNIA PROPOSITION 65 WARNING

⚠ **WARNING:** Cancer and Reproductive Harm.
⚠ **AVERTISSEMENT:** Peut Causer le Cancer et des Dommages au Système Reproducteur.
⚠ **ADVERTENCIA:** Cáncer y Daño Reproductivo.
www.p65warnings.ca.gov. P/N 200174-A

For residential inground or aboveground swimming pools requiring turnover through 54,000 gallons, at flow rates up to 20 GPM for 8 to 10 hours. Permanent media high rate sand filters in 16 in., 19 in., 22 in., 24 in. and 26 in. diameter models accommodate large and small pools, offering the best combination of economy, performance, durability and ease of maintenance. Corrosion-resistant, one-piece, extra-thick molded polyethylene tank assures long service life. Top-mounted, corrosion-resistant multiport selector valve included. Also includes a convenient tank winterizing drain and continuous air relief system. *Max Operating Temp 95°F

Ordering Information

Product	Effective Filtration Area (Sq. Ft.)	Max. Pressure (PSI)	Flow Rate (GPM)	Turnover Capacity (In Gallons)			All Sand Required (Lbs.)	Carton Qty.	Carton Wt. (Lbs.)
				8 Hour	10 Hour	12 Hour			
CRISTAL-FLO II FILTERS									
145359	1.4	30	35	16,800	21,000	25,200	100	1	22
145360	1.8	35	40	19,200	24,000	28,800	150	1	24
145361	2.3	40	60	28,800	36,000	43,200	250	1	28
145362	3.15	50	70	33,600	42,000	54,000	300	1	58
145363	3.5	50	75	36,000	45,000	54,000	350	1	76
145387*	3.5	50	75	36,000	45,000	54,000	350	1	76

* with 2 in. valve

Dimensions and Performance

DIMENSION TABLE

Model	A DIM.	B DIM.	C DIM.	D DIM.	E DIM.
145359	33-1/2 in.	16-1/2 in.	37 in.	30-3/4 in.	34-1/4 in.
145360	37-3/4 in.	19-1/2 in.	46-1/4 in.	35 in.	43-1/2 in.
145361	43-3/4 in.	22-1/2 in.	52-1/2 in.	40-3/4 in.	49-1/4 in.
145362	46-1/4 in.	24 in.	57 in.	43-1/4 in.	53-3/4 in.
145363	48-3/4 in.	26 in.	65-3/4 in.	45-5/8 in.	62-1/2 in.
145387	48-3/4 in.	26 in.	65-3/4 in.	45-5/8 in.	62-1/2 in.

* Integrated continuous High Flow internal air relief is operational only when there is unobstructed flow in the circulating system.

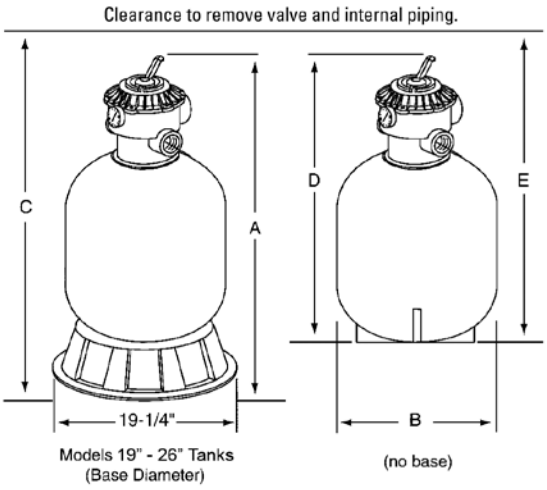

See page 401 for replacement parts.

SYSTEM⁝3® SAND FILTERS

SS SERIES FILTERS

STA-RITE

TRADEGRADE

System⁝3 Sand Filters
SS Series

Featured Highlights

- Typical Installations – Inground pools, inground hot tubs, and water features
- Quality Construction – Durable two-piece tank housing constructed of Dura-Glas™, Sta-Rite's industry leading glass-reinforced composite resin
- Innovative Design – The innovative design of the System⁝3 tank combined with the lateral/hub assembly produces a balanced flow of water and deeper sand bed penetration
- Low Maintenance – The deep sand bed holds more dirt, resulting in longer filter cycles and less cleaning
- Dual Drain Plugs – Side plug helps make sand removal easy, while the bottom plug comes with integral screen for easy draining without the loss of sand
- Sleek Looks – Contemporary style and matte black finish looks attractive in any pool setting

System⁝3 brings you the proven performance of Sta-Rite's sophisticated sand filter hydraulics in an easy-to-operate filter. Highly efficient, its sophisticated design yields a uniform flow pattern through a deeper sand bed than any other. Modular filter tanks allows for quick change of filter medias without changing the tank. Contemporary style and matte black finish looks attractive in any pool setting.

Ordering Information

Product	Filter Area (Sq. Ft.)	Flow Rated [1] at 15–20 GPM (per Sq. Ft.)	Turnover Capacity (Gallons) (Flow Rate x 60 x Hours)			Tank Port Size	Sand [2] Required (Lbs.)	Carton Wt. (Lbs.)
			6 Hour	8 Hour	10 Hour			
SYSTEM⁝3 SAND FILTERS - SS SERIES								
S7S50	2.4	36–48	13–17,000	17–23,000	22–29,000	2 in.	200	103
S8S70	3.4	51–68	18–25,000	25–33,000	31–41,000	2 in.	300	121
SS SERIES VALVE OPTIONS [3]								
18202-0150	ABS 6-Position Valve with Union Connections – 1-1/2 in. Valve Port							5
18201-0200	ABS 6-Position Valve with Union Connections – 2 in. Valve Port							8
263053	VLV Push Pull, 7.81 in. center							4
262508	FullFloXF for System 3 D.E. and Sand, inlet on bottom, with Sta-Rite offset adapters glued on							10
ACCESSORIES FOR SS SERIES								
25021-2021	Sand Conversion Kit – S7S50 - Collector Assembly and Valve Sold Separately (new valve may be required)							5
25021-2025	Sand Conversion Kit – S8S70 - Collector Assembly and Valve Sold Separately (new valve may be required)							6

[1] Based on NSF recommended flow rate for commercial at 15–20 GPM per square foot.

[2] Use only #20 white quartz silica sand, size range 0.40–0.55 mm; 12 in. to 15 in. sand bed depth required.

[3] Valves must be purchased separately.

Note: Operating Limits – maximum continual operating pressure of 50 PSI. Pool/Spa (bather) applications, maximum water temperature (internal filter) 104°F (40°C).

CALIFORNIA PROPOSITION 65 WARNING

WARNING: Cancer and Reproductive Harm.
AVERTISSEMENT: Peut Causer le Cancer et des Dommages au Système Reproducteur.
ADVERTENCIA: Cáncer y Daño Reproductivo.
www.p65warnings.ca.gov.

SYSTEM 3® SAND FILTERS (CONT'D)

SS SERIES FILTERS

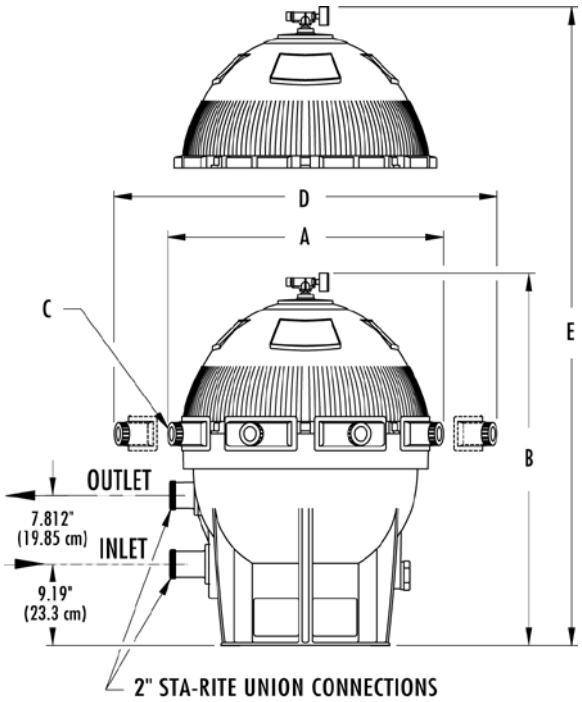

Dimensions and Performance

18202-0150
1-1/2 in. MULTIPORT VALVE

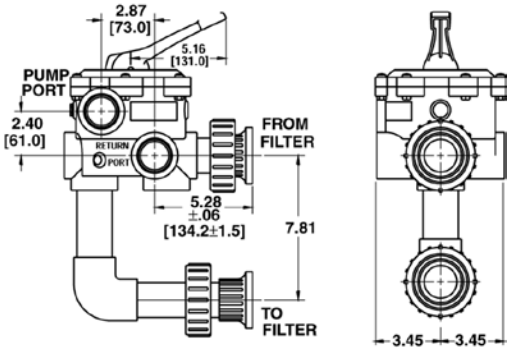

18201-0200
2 in. MULTIPORT VALVE

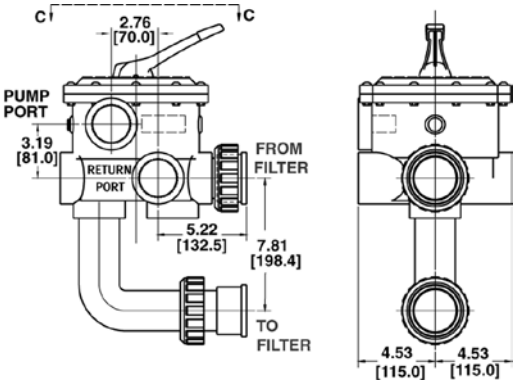

All dimensions shown in inches.

	DIMENSION				
Catalog Number	A	B	C	D	E
S7S50	28-1/2	42	7	36	50
S8S70	32-1/2	42-1/4	8	40	50

A = width
B = height
C = number of clamps
D = area (width) needed to take off clamps
E = area (height) needed to remove top half of tank
All dimensions shown in inches.

Certified to NSF/ANSI Standard 50

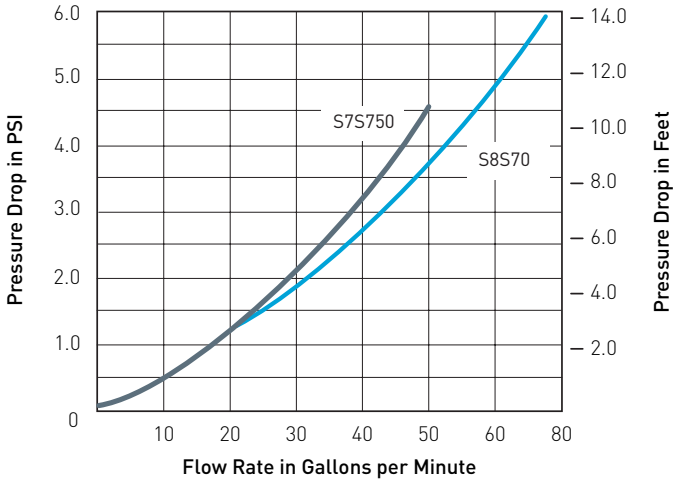

See page 402 for replacement parts.

THS SERIES® HORIZONTAL SAND FILTER

THS Series Horizontal Sand Filter

Featured Highlights

- Five sizes to 27 sq. ft.
- Manway in front for easy access and smaller footprint
- Manway with viewport available as option
- 6 in. flanged connections, 4 in. victaulic on the THS Series 3461
- Optional manual, semi-automatic, and automatic backwash systems for one and two tank systems
- Two backwash controllers to choose from
- Influent manifold distribution to prevent clogging
- NSF approved from 5–20 gpm/sq. ft.

The THS Series Filter is an NSF-approved 50 psi rated tank with flow rates up to 535 gallons per minute. The filter shell is manufactured from a lasting composite laminate design that makes winding unnecessary. Paracote®, a waterbased, environmentally-friendly coating, provides remarkable surface protection.

Ordering Information

Product	Model	Description	Effective Filtration Area (Sq. Ft.)	Flow Rate (15 GPM/ Sq. Ft.)	6 Hour Turnover Capacity (In Gallons)	Filter Media: Pea Gravel Required (Lbs.)	Filter Media: Sand Required (Lbs.)	All Sand Required (Lbs.)	Carton Wt. (Lbs.)
THS SERIES HORIZONTAL FILTER									
143461	THS3461	THS 34 in. x 61 in.	13.5	203	73,080	300	1250	1550	550
143484	THS3484	THS 34 in. x 84 in.	19.0	285	102,600	600	1350	1950	610
144272	THS4272	THS 42 in. x 72 in.	19.7	295	106,200	500	2100	2600	650
144284	THS4284	THS 42 in. x 84 in.	23.2	348	125,280	600	2400	3000	725
144296	THS4296	THS 42 in. x 96 in.	26.7	400	144,000	700	2800	3500	800

CONTROLLERS (MUST USE WITH DIAPHRAGM VALVES MANIFOLD KITS)			
156400	Single THS manual controller 6 in. FP	156850	Single THS CA100 autobackwash controller
156450	Dual THS manual controller 6 in. FP	CS400-01	CS400 backwash controller for single tank system
156800	Dual THS CA100 autobackwash controller	CS400-02	CS400 backwash controller for dual tank system

CM200 Manual Backwash Controller
This is the simplest option. No electronics or programming required. Simply turn the knob to backwash each tank in the system.

CS 400 Commercial Backwash Controller
This controller is programmable and controls every aspect of the backwash cycle once initiated. Backwash can be initiated three ways: by an operator with the touch of a button, by a signal from a master controller (such as the AK600), or by a signal from an optional differential pressure switch (CS400-DP). Stored backwash data and history, alarms, and calculated backwash cycle times are also features of the CS400 controller, as are relays for communication with the heater, pump and Acu Drive.

CA 100 Fully Automatic Backwash Controller
This is the most comprehensive backwash controller and can be readily reprogrammed to initiate backwash automatically based on differential pressure (integral pressure transducers are standard), time (internal seven-day clock with battery back-up is standard), flow (with optional flow sensor), or any combination of the above. The controller has real-time display of operation mode, filter flow rate, and water temperature (with optional temperature probe). Also, includes Energy Saver Mode for simple On/Off pump scheduling and various interlocks and relays to communicate with other equipment (pump, heater, Acu Drive).

THS SERIES® HORIZONTAL SAND FILTER (CONT'D)

MANIFOLD KITS [7]	
155700	THS single tank manifold kit with butterfly valves [3]
155720	THS dual tank manifold kit with butterfly valves [3]
155701	THS single tank 6 in. FP kit with diaphragm valves[6]
155721	THS dual 34 x 84 in. 6 in. FP kit with diaphragm valves[6]
155730	THS dual 42 in. dia. 6 in FP Kit with diaphragm valves[6]
MANIFOLD KITS FOR THS 34 X 61 ONLY [7]	
155702	Kit-THS3461, single tank manifold, with butterfly valve kit [3]
155722	Kit-THS3461, dual tank manifold, with butterfly valve kit [3]
155703	Kit-THS3461, single tank manifold, with diaphragm valve kit[6]
155723	Kit-THS3461, dual tank manifold, with diaphragm valve kit[6]

ACCESSORIES	
140325	Adder kit for third THS Filter [2]
156100	Temperature probe kit [4]
156150	Flowmeter saddle kit 6 in. [4]
155800	WA-KIT wedge anchor kit [1]
155705	Manway with Viewport upgrade - at time of purchase
155706	Manway with Viewport Retrofit Kit - replace existing in field
CS400DP	Mounted differential pressure switch [5]
B4110	120v to 24v 100w transformer
B4221KIT	Gauge Panel Kit Influent/Effluent gauge

[1] One each per tank purchased if required.

[2] Adder Kit provides 6 in., SCH 80 manifold piping, fittings and hardware for the addition of a third THS Series filter of equal diameter only when #155720 Dual-Filter Butterfly Valve Face Piping Kit is used. Note: Using a 6 in. Schedule 80 plumbing kit with flows in excess of 812 GPM exceeds the maximum water velocity recommended in ANSI/NSPI-1 2003 Standard for Public Swimming Pools. For higher flows, summary calculations should be provided to show that the greater flow is possible with the pump and piping provided.

[3] Does not require a purchase of a controller.

[4] Only used with CA100 controller option.

[5] Only available with CS400 controller.

[6] Does require a purchase of a controller.

[7] Does not include THS Tanks.

Dimensions and Performance

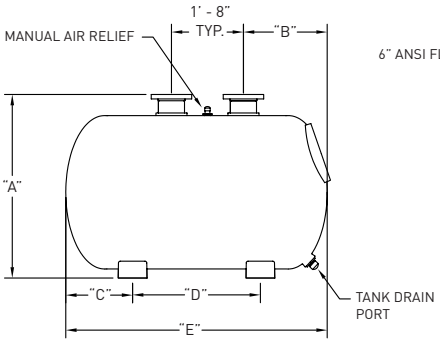

Side View

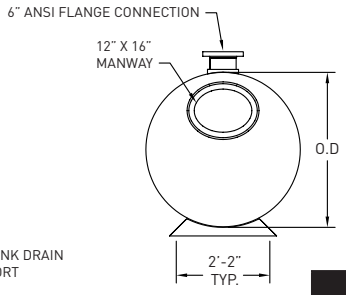

Front View

Certified to NSF/ANSI Standard 50

THS SERIES SPECIFICATION CHART							
	Tank Dimensions						
Model	"A" in.	"B" in.	"C" in.	"D" in.	"E" in.	"O.D." in.	WT
THS3461	39-1/2	21	16	30	62	35	550
THS3484	45	21-1/4	24-5/8	35-1/4	85	35	610
THS4272	52-1/4	23-1/4	18-7/8	35-1/4	73	43	650
THS4284	52-1/4	23-1/4	24-7/8	35-1/4	85	43	725
THS4296	52-1/4	23-1/4	30-7/8	35-1/4	97	43	800

NSF/ANSI 50 approved for 5–20 gpm/sq.ft.

THS 34 X 61

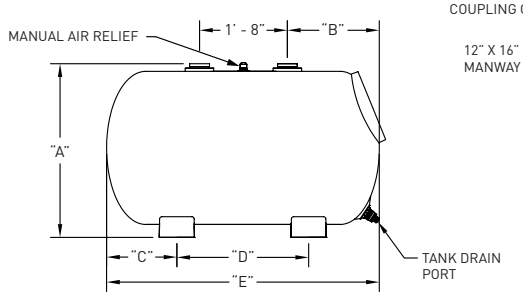

Side View

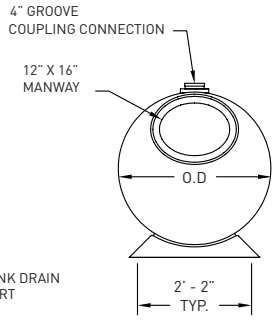

Front View

* 4 in. victaulic on THS 3461 only

CALIFORNIA PROPOSITION 65 WARNING

⚠ **WARNING:** Cancer and Reproductive Harm.
⚠ **AVERTISSEMENT:** Peut Causer le Cancer et des Dommages au Système Reproducteur.
⚠ **ADVERTENCIA:** Cáncer y Daño Reproductivo.
www.p65warnings.ca.gov. P/N 20074-A

See page 406 for replacement parts.

TRITON® HD SIDE MOUNT FILTERS

HEAVY-DUTY FIBERGLASS SAND FILTER WITHOUT VALVES

TRADEGRADE

Triton HD Filter
(Unions not included)

Featured Highlights

Maximum Operating Pressure 75 psi

CALIFORNIA PROPOSITION 65 WARNING

⚠ **WARNING:** Cancer and Reproductive Harm.
⚠ **AVERTISSEMENT:** Peut Causer le Cancer et des Dommages au Système Reproducteur.
⚠ **ADVERTENCIA:** Cáncer y Daño Reproductivo.
www.p65warnings.ca.gov.

All the same great performance and features of the original Triton filter with maximum operating pressure of 75 psi for those special high pressure installations such as single pump in-floor cleaning systems.

Ordering Information

Product	Model	Effective Filtration Area (Sq. Ft.)	Flow Rate (GPM Comm)	Turnover Capacity (In Gallons)			Filter Media		All Sand Req'd (Lbs.)	Carton Wt. (Lbs.)
				8 Hour	10 Hour	12 Hour	Pea Gravel Required (Lbs.)	Sand Required (Lbs.)		
TRITON HD SAND FILTER										
140335	TR100 HD	4.91	74	35,520	44,400	53,280	150	450	600	66
TRITON HD VALVE OPTIONS [1]										
263079	2 in. PVC slide valve w/o plumbing, for D.E. & sand filters									3
261049	2 in. HiFlow valve, no plumbing									7
261050	2 in. HiFlow valve w/ plumbing, for sand filters									11
261055	2 in. MPV for sand filters (SM 20-3)									10
261173	1-1/2 in. MPV, for sand filters (SM 10-3)									6
263064	Push Pull 7-1/2 in. Center Valve, Almond ABS									5
263080	FullFloXF Valve for Sand, inlet port on top, Pentair 2 in. unions glued on XF Valve									

[1] Valves must be purchased separately.

Dimensions and Performance

Certified to NSF/ANSI Standard 50

DIMENSION TABLE

MODEL	A. DIM.	B DIM.	C DIM.	D DIM.
TR100 HD	39-¾ in.	30-½ in.	16-¼ in.	41-¾ in.

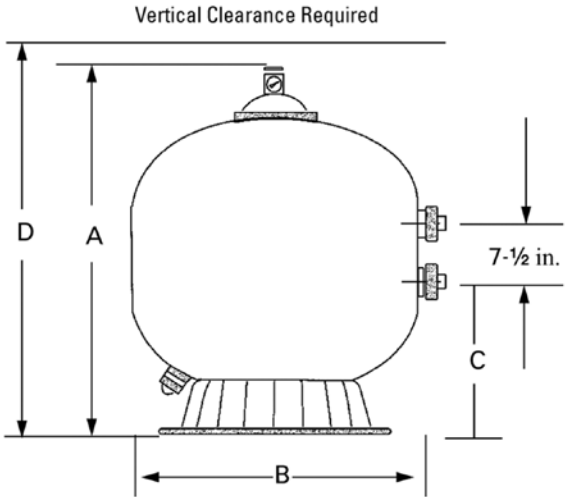

TRITON® C AND TRITON C-3

HIGH CAPACITY FIBERGLASS SIDE MOUNT SAND FILTER WITHOUT VALVES

TRADEGRADE

Featured Highlights

- Maximum Operating Pressure 50 psi
- Full 2 in. Drain
- 8 in. opening for easy access to sand bed
- The Triton C-3 features standard 3 in. flange connections
- TR 100C-3 & TR 140C-3 models are available in black only

CALIFORNIA PROPOSITION 65 WARNING

⚠ **WARNING:** Cancer and Reproductive Harm.
⚠ **AVERTISSEMENT:** Peut Causer le Cancer et des Dommages au Système Reproducteur.
⚠ **ADVERTENCIA:** Cáncer y Daño Reproductivo.
www.p65warnings.ca.gov.

TR 140C-3 TR 100 C

This filter series features multiple diverters for increased filtration rates in commercial applications up to 20 GPM/sq. ft.

Ordering Information

Product	Model	Effective Filtration Area (Sq. Ft.)	Flow Rate	Turnover Capacity (In Gal.)[2] 6 Hour	8 Hour	10 Hour	Filter Media Pea Gravel Req'd (Lbs.)	Sand Req'd (Lbs.)	All Sand Req'd (Lbs.)	Ctn Qty.	Ctn Wt. (Lbs.)
TRITON C SAND FILTERS											
140315	TR 100C- Almond	4.91	98	35,280	47,040	58,800	150	450	600	1	70
140316	TR 140C- Almond	7.06	141	50,760	67,680	84,600	275	650	925	1	82
TRITON C-3 SAND FILTERS											
140310	TR 100C-3-Black only	4.91	98	35,280	47,040	58,800	150	450	600	1	65
140342	TR 140C-3-Black only	7.06	141	50,760	67,680	84,600	275	650	925	1	82
TRITON C VALVE OPTIONS [1]											
261050	2 in. HiFlow w/ plumbing, for sand filters									1	11
261055	2 in. MPV, for sand filters (SM 20-3)									1	10
263010	Full-Flow valve, sand filters (will only work on the TR100C and TR140C models)									1	7
263080	FullFloXF Valve for Sand, inlet port on top, Pentair 2 in. unions glued on XF Valve										
CLEAR PRO TECHNOLOGY LATERAL KITS											
159029	Clear Pro TR 100C Kit										
159031	Clear Pro TR 100C-3 Kit										
159030	Clear Pro TR 140C Kit										
159032	Clear Pro TR 140C-3 Kit										

[1] Valves must be purchased separately.

[2] Based on 20 gpm per sq. ft. Tanks are NSF/ANSI 50 approved for 5–20 gpm/sq.ft.

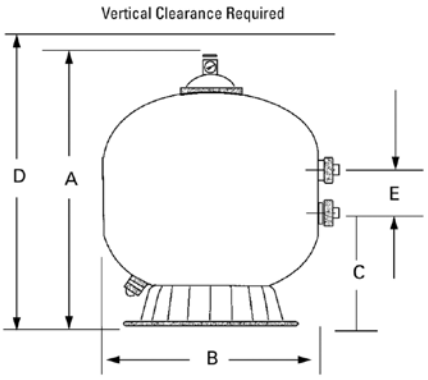

Dimensions and Performance

Certified to NSF/ANSI Standard 50

DIMENSION TABLE

MODEL	A. DIM.	B DIM.	C DIM.	D DIM.	E DIM.
TR 100 C	39-¾ in.	30-½ in.	16-½ in.	43-¾ in.	7-½ in.
TR 140 C	45-¼ in.	36-½ in.	18-¾ in.	49-¼ in.	7-½ in.
TR 100 C-3	39-¾ in.	30-½ in.	16-1/16 in.	43-¾ in.	7.72 in.
TR 140 C-3	45-¼ in.	36-½ in.	18-½ in.	49-¼ in.	7.72 in.

See pages 403–404 for replacement parts.

SCH 40 & 80 FOR TR100C, TR140C, TR100C-3 & TR140C-3

TANDEM FILTER PIPING KITS FOR 2 & 3 IN. FILTERS

These Tandem Filter Piping Kits are designed specifically for use with the Triton® TR100C, TR140C, Triton TR100C-3 and TR140C-3 Sand Filters to make the best even better.

We are providing this additional service for your convenient one-stop shopping. Pipe and filters are all you need.

Pipe is not included in kits.

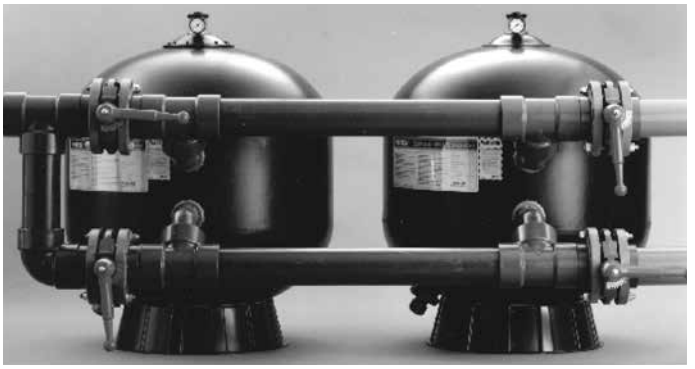

Tandem Filter Piping Kits for Triton TR100C, TR140C, TR100C-3 and TR140C-3 Sand Filters

CALIFORNIA PROPOSITION 65 WARNING

WARNING: Cancer and Reproductive Harm.
AVERTISSEMENT: Peut Causer le Cancer et des Dommages au Système Reproducteur.
ADVERTENCIA: Cáncer y Daño Reproductivo.
www.p65warnings.ca.gov.

Ordering Information

Product	Model
For Plumbing Two TR100C or TR140C Filters	
146400	3 in. Two filter kit, SCH 40 (200 GPM)
146402	4 in. Two filter kit, SCH 40 (300 GPM)
146404	6 in. Two filter kit, SCH 40 (700 GPM)
146403	4 in. Two filter kit, SCH 80 (300 GPM)
146405	6 in. Two filter kit, SCH 80 (700 GPM)
For Plumbing Two TR100C-3 or TR140C-3 Filters	
147400	3 in. Two filter kit, SCH 40 (200 GPM)
147402	4 in. Two filter kit, SCH 40 (300 GPM)
147404	6 in. Two filter kit, SCH 40 (700 GPM)
147401	3 in. Two filter kit, SCH 80 (200 GPM)
147403	4 in. Two filter kit, SCH 80 (300 GPM)
147405	6 in. Two filter kit, SCH 80 (700 GPM)

Product	Model
Adder Kits for TR100C and TR140C Filters [1]	
146406	4 in. Single filter kit, SCH 40
146408	6 in. Single filter kit, SCH 40
146407	4 in. Single filter kit, SCH 80
146409	6 in. Single filter kit, SCH 80
Adder Kits for TR100C-3 and TR140C-3 Filters	
147406	4 in. Single filter kit, SCH 40
147408	6 in. Single filter kit, SCH 40
147407	4 in. Single filter kit, SCH 80
147409	6 in. Single filter kit, SCH 80

Note: All kits include hardware, fittings, gaskets.

Note: All kits include hardware, fittings, gaskets and butterfly valves.

Filters	Filter Area Sq. Ft.	Manifold Pipe Dia.	Filter Rate Sq. Ft.		Turnover Capacity		
			15 GPM	20 GPM	6 Hours	8 Hours	10 Hours
TANDEM TRITON 140C FILTER INSTALLATION							
6 TR 140's	42.36	6 in.	635	—	228,600	304,800	381,000
		8 in.	—	847	304,920	406,560	508,200
7 TR 140's	49.42	6 in.	741	—	266,760	355,680	444,600
		8 in.	—	988	355,680	474,240	592,800
8 TR 140's	56.48	8 in.	847	—	304,920	406,560	508,200
		8 in.	—	1130	406,800	542,400	678,000

SCH 40 & 80 FOR TR100C, TR140C, TR100C-3 & TR140C-3 (CONT'D)

TANDEM FILTER PIPING KITS FOR 2 & 3 IN. FILTERS

Filters	Filter Area Sq. Ft.	Manifold Pipe Dia.	Filter Rate Sq. Ft.		Turnover Capacity		
			15 GPM	20 GPM	6 Hours	8 Hours	10 Hours
TANDEM TRITON TR100C AND TR100C-3 FILTER INSTALLATION							
2 TR 100's	9.82	3 in.	147	—	52,920	70,560	88,200
		4 in.	—	196	70,560	94,080	117,600
3 TR 100's	14.73	4 in.	221	—	79,560	106,080	132,600
		4 in.	—	295	106,200	141,600	177,000
4 TR 100's	19.64	4 in.	295	—	106,200	141,600	177,000
		5 in.	—	393	141,480	188,640	235,800
5 TR 100's	24.55	5 in.	368	—	132,480	176,640	220,800
		5 in.	—	491	176,760	235,680	294,600
TANDEM TRITON TR140C AND TR140C-3 FILTER INSTALLATION							
2 TR 140's	14.12	4 in.	212	—	76,320	101,760	127,200
		4 in.	—	282	101,520	135,360	169,200
3 TR 140's	21.18	4 in.	318	—	114,480	152,640	190,800
		5 in.	—	424	152,640	203,520	254,400
4 TR 140's	28.24	5 in.	424	—	152,640	203,520	254,400
		6 in.	—	565	203,040	270,720	338,400
5 TR 140's	35.30	5 in.	530	—	190,800	254,400	318,000
		6 in.	—	706	254,160	338,880	423,600

Dimensions and Performance

Two Filter System	A	B	C	D	E	F	G	H	I	J	K	Total Wt.
3 in.–TR100C	82-3/8 in.	17-15/16 in.	48 in. min.	18 in. min.	39-3/4 in.	15 in.	29-33/64 in.	8-5/8 in.	11-1/32 in.	51-13/16 in.	—	2300 lbs.
3 in.–TR140C	88-3/8 in.	17-15/16 in.	54 in. min.	18 in. min.	45-1/4 in.	18 in.	32-33/64 in.	8-5/8 in.	13-15/32 in.	57-13/16 in.	—	3200 lbs.
4 in.–TR140C	95-3/4 in.	19-35/64 in.	54 in. min.	18 in. min.	45-1/2 in.	18 in.	33-1/8 in.	9-15/16 in.	12-21/32 in.	59-11/64 in.	—	2300 lbs.
6 in.–TR140C *	111-3/4 in.	24-7/32 in.	54 in. min.	18 in. min.	45-1/2 in.	18 in.	35-3/8 in.	12-13/16 in.	10-21/64 in.	64-13/32 in.	64-53/64 in.	3550 lbs.

* 6 in. piping needs to be rotated upward as shown at 25° so handle will clear the floor.

FIGURE 4A

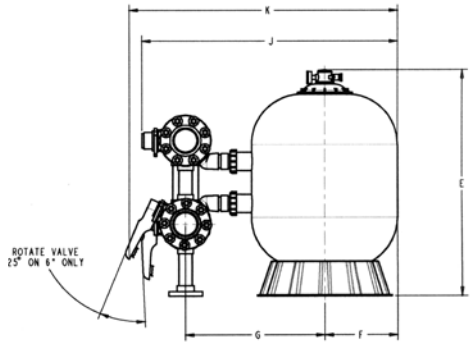

FIGURE 4B

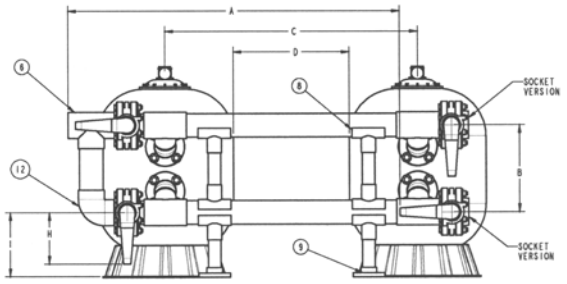

See page 405 for replacement parts.

PLUMBING KITS & ACCESSORIES

50901600

154566

Featured Highlights

- Unionized pump/filter plumbing kits and base
- Bulkhead Union Sets can connect D.E. and high-rate sand filters to any plumbing. The kit consists of two half unions with both 1-1/2 and 2 in. pipe connections.

Ordering Information

Product	Description	Carton Qty.	Carton Wt. (Lbs.)
	UNIONS		
98960311	Bulkhead union kit, 1-1/2 in. & 2 in. for Eclipse Filters	1	1
	SIGHT GLASS		
50901600	Sight glass, 1-1/2 in. socket	1	1
	TOOLS		
192019	Drain plug wrench [1]	1	1
	ACCESSORIES AND KITS		
154566	2 in. Sight glass nipple, clear	1	1
185208	Plumbing kit, NS/FNS/CH, for use with Slide valve & Challenger, without valve	1	17
271092	2 in. Threaded adapter kit, for installations without valve	1	1
271094	1-1/2 in. Threaded adapter kit, w/o valve, for installations without valve	1	1
271096	2 in. Threaded bulkhead adapter kit, for installations without valve	1	1
274725	Union check valve, 2 in. socket	1	1
274426Z	Adapter Union Replacement Kit, 2-1/2 in. x 2 in.	1	2
354570	1-1/2 in. Quick disconnect kit, for Regenerative D.E. Filter	1	1
542090	Sand Vac, empties a sand filter in 10 minutes for repair, refilling, or removal	1	3

[1] For use on FNS Plus, Nautilus Plus & Clean & Clear Plus filters.

[2] For use on Star filters.

[3] Torque wrench not required for filters with Tension Control™ clamp.

542090

354570
(now available in black)

274725

CALIFORNIA PROPOSITION 65 WARNING

WARNING: Cancer and Reproductive Harm.
AVERTISSEMENT: Peut Causer le Cancer et des Dommages au Système Reproducteur.
ADVERTENCIA: Cáncer y Daño Reproductivo.
www.p65warnings.ca.gov.

271094, 271096, 271092

185208

See pages 407–408 for replacement parts.

RETRO-FIT & UPGRADE KITS

Ordering Information

Product	Description
FNS KITS [1]	
181010	FNS clamp spring kit (works on all FNS clamps after 1-89)
NS KITS [1]	
181011	NS/PF35 spring clamp assembly

Product	Description
PF SAND KITS [1]	
181011	NS/PF35 spring clamp assembly
FILTER UPGRADES	
98209804	High flow manual air relief valve w/ instruction labels
59000400	High flow internal air relief kit upgrade for Titan manifold

[1] For filters manufactured prior to 1991.

[2] For use on filters built before 11-94.

CALIFORNIA PROPOSITION 65 WARNING

⚠ **WARNING:** Cancer and Reproductive Harm.
⚠ **AVERTISSEMENT:** Peut Causer le Cancer et des Dommages au Système Reproducteur.
⚠ **ADVERTENCIA:** Cáncer y Daño Reproductivo.
www.p65warnings.ca.gov. P/N 20074.A

FILTER BASE KITS

BASE KITS FOR D.E. AND/OR SAND FILTERS

180010 - Elevated Base, Pump to Valve Plumbing Parts, and Mounting Hardware.
Use with FNS® Plus Filters and Challenger® Pumps with Slide Valve.

Ordering Information

Product	Description	Carton Qty.	Carton Wt. (Lbs.)
ELEVATED BASE KITS			
180010	Base kit FNS Plus/CH/Slide, used for mounting FNS Plus and Slide Valves with Challenger Pump	1	17

CALIFORNIA PROPOSITION 65 WARNING

⚠ **WARNING:** Cancer and Reproductive Harm.
⚠ **AVERTISSEMENT:** Peut Causer le Cancer et des Dommages au Système Reproducteur.
⚠ **ADVERTENCIA:** Cáncer y Daño Reproductivo.
www.p65warnings.ca.gov. P/N 20074.A

NOTES: