PENTAIR

INTELLIFLO®

VARIABLE SPEED PUMP

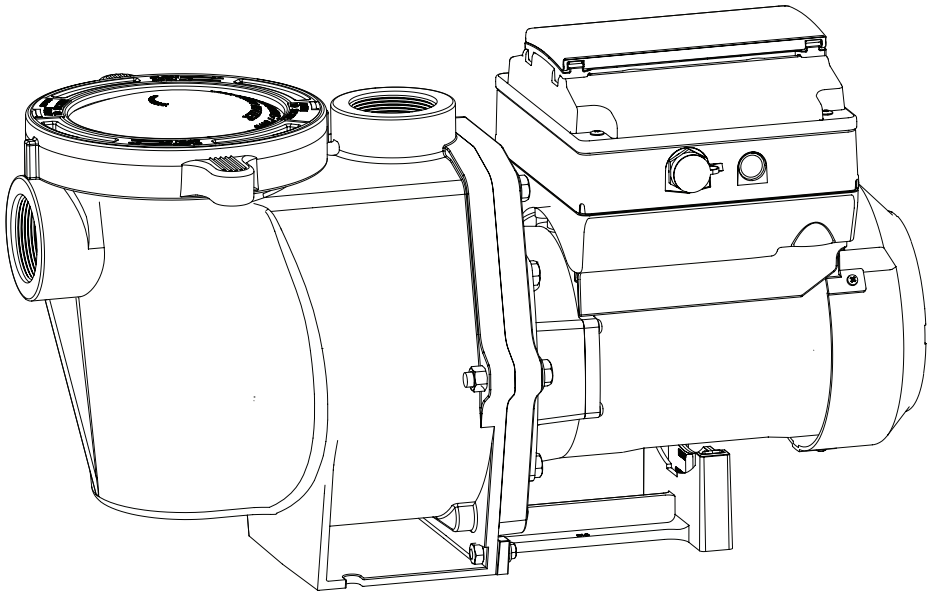

INSTALLATION AND USER'S GUIDE

IMPORTANT SAFETY INSTRUCTIONS

READ AND FOLLOW ALL INSTRUCTIONS

SAVE THESE INSTRUCTIONS

IMPORTANT PUMP WARNING AND SAFETY INSTRUCTIONS

IMPORTANT NOTICE

This guide provides installation and operation instructions for this pump. Consult Pentair with any questions regarding this equipment.

Attention Installer: This guide contains important information about the installation, operation and safe use of this product. This information should be given to the owner and/or operator of this equipment after installation or left on or near the pump.

Attention User: This manual contains important information that will help you in operating and maintaining this product. Please retain it for future reference.

READ AND FOLLOW ALL INSTRUCTIONS
SAVE THESE INSTRUCTIONS

This is the safety alert symbol. When you see this symbol on your system or in this manual, look for one of the following signal words and be alert to the potential for personal injury.

DANGER Warns about hazards that can cause death, serious personal injury, or major property damage if ignored.

WARNING Warns about hazards that may cause death, serious personal injury, or major property damage if ignored.

CAUTION Warns about hazards that may or can cause minor personal injury or property damage if ignored.

NOTE Indicates special instructions not related to hazards.

Carefully read and follow all safety instructions in this manual and on equipment. Keep safety labels in good condition; replace if missing or damaged.

When installing and using this electrical equipment, basic safety precautions should always be followed, include the following:

DANGER FAILURE TO FOLLOW ALL INSTRUCTIONS AND WARNINGS CAN RESULT IN SERIOUS BODILY INJURY OR DEATH. **THIS PUMP SHOULD BE INSTALLED AND SERVICED ONLY BY A QUALIFIED POOL SERVICE PROFESSIONAL. INSTALLERS, POOL OPERATORS AND OWNERS MUST READ THESE WARNINGS AND ALL INSTRUCTIONS IN THE OWNER'S MANUAL BEFORE USING THIS PUMP. THESE WARNINGS AND THE OWNER'S MANUAL MUST BE LEFT WITH THE POOL OWNER.**

WARNING Do not permit children to use this product.

WARNING **RISK OF ELECTRICAL SHOCK.** Connect only to a branch circuit protected by a ground-fault circuit-interrupter (GFCI). Contact a qualified electrician if you cannot verify that the circuit is protected by a GFCI.

WARNING This unit must be connected only to a supply circuit that is protected by a ground-fault circuit-interrupter (GFCI). Such a GFCI should be provided by the installer and should be tested on a routine basis. To test the GFCI, push the test button. The GFCI should interrupt power. Push the reset button. Power should be restored. If the GFCI fails to operate in this manner, the GFCI is defective. If the GFCI interrupts power to the pump without the test button being pushed, a ground current is flowing, indicating the possibility of an electric shock. Do not use this pump. Disconnect the pump and have the problem corrected by a qualified service representative before using.

CAUTION This pump is for use with permanent swimming pools and may also be used with hot tubs and spas if so marked. Do not use with storable pools. A permanently-installed pool is constructed in or on the ground or in a building such that it cannot be readily disassembled for storage. A storable pool is constructed so that it is capable of being readily disassembled for storage and reassembled to its original integrity.

General Warnings

- Never open the inside of the drive motor enclosure. There is a capacitor bank that holds a 230 VAC charge even when there is no power to the unit.
- The pump is not submersible.
- The pump is capable of high flow rates; use caution when installing and programming to limit pumps performance potential with old or questionable equipment.
- Code requirements for electrical connection differ from country to country, state to state, as well as local municipalities. Install equipment in accordance with the National Electrical Code and all applicable local codes and ordinances.
- Before servicing the pump; switch OFF power to the pump by disconnecting the main circuit to the pump.
- This appliance is not intended for use by persons (including children) of reduced physical, sensory or mental capabilities, or lack of experience and knowledge, unless they have been given supervision or instruction concerning the use of the appliance by a person responsible for their safety.

DANGER SUCTION ENTRAPMENT HAZARD: STAY OFF THE MAIN DRAIN AND AWAY FROM ALL SUCTION OUTLETS! **THIS PUMP IS NOT EQUIPPED WITH SAFETY VACUUM RELEASE SYSTEM (SVRS) PROTECTION AND DOES NOT PROTECT AGAINST BODY OR LIMB ENTRAPMENTS, DISEMBOWELMENTS (WHEN A PERSON SITS ON A BROKEN OR UNCOVERED POOL DRAIN) OR HAIR ENTANGLEMENTS.**

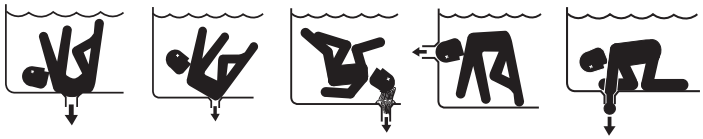

THIS PUMP PRODUCES HIGH LEVELS OF SUCTION AND CREATES A STRONG VACUUM AT THE MAIN DRAIN AT THE BOTTOM OF THE BODY OF WATER. THIS SUCTION IS SO STRONG THAT IT CAN TRAP ADULTS OR CHILDREN UNDER WATER IF THEY COME IN CLOSE PROXIMITY TO A DRAIN OR A LOOSE OR BROKEN DRAIN COVER OR GRATE.

THE USE OF UNAPPROVED COVERS OR ALLOWING USE OF THE POOL OR SPA WHEN COVERS ARE MISSING, CRACKED OR BROKEN CAN RESULT IN BODY OR LIMB ENTRAPMENT, HAIR ENTANGLEMENT, BODY ENTRAPMENT, EVISCERATION AND/OR DEATH.

The suction at a drain or outlet can cause:

Limb Entrapment: When a limb is sucked or inserted into an opening resulting in a mechanical bind or swelling. This hazard is present when a drain cover is missing, broken, loose, cracked or not properly secured.

Hair Entanglement: When the hair tangles or knots in the drain cover, trapping the swimmer underwater. This hazard is present when the flow rating of the cover is too small for the pump or pumps.

Body Entrapment: When a portion of the body is held against the drain cover trapping the swimmer underwater. This hazard is present when the drain cover is missing, broken or the cover flow rating is not high enough for the pump or pumps.

Evisceration/Disembowelment: When a person sits on an open pool (particularly a child wading pool) or spa outlet and suction is applied directly to the intestines, causing severe intestinal damage. This hazard is present when the drain cover is missing, loose, cracked, or not properly secured.

Mechanical Entrapment: When jewelry, swimsuit, hair decorations, finger, toe or knuckle is caught in an opening of an outlet or drain cover. This hazard is present when the drain cover is missing, broken, loose, cracked, or not properly secured.

NOTE: ALL SUCTION PLUMBING MUST BE INSTALLED IN ACCORDANCE WITH THE LATEST NATIONAL AND LOCAL CODES, STANDARDS AND GUIDELINES.

IMPORTANT PUMP WARNING AND SAFETY INSTRUCTIONS

⚠WARNING **TO MINIMIZE THE RISK OF INJURY DUE TO SUCTION ENTRAPMENT HAZARD:**

- A properly installed and secured ANSI/ASME A112.19.8 approved anti-entrapment suction cover must be used for each drain.
- Each suction cover must be installed at least three (3') feet apart, as measured from the nearest point to nearest point.
- Regularly inspect all covers for cracks, damage and advanced weathering.
- If a cover becomes loose, cracked, damaged, broken or is missing, replace with an appropriate certified cover.
- Replace drain covers as necessary. Drain covers deteriorate over time due to exposure to sunlight and weather.
- Avoid getting hair, limbs or body in close proximity to any suction cover, pool drain or outlet.
- Disable suction outlets or reconfigure into return inlets.

⚠WARNING The pump can produce high levels of suction within the suction side of the plumbing system. These high levels of suction can pose a risk if a person comes within the close proximity of the suction openings. A person can be seriously injured by this high level of vacuum or may become trapped and drown. It is absolutely critical that the suction plumbing be installed in accordance with the latest national and local codes for swimming pools.

⚠WARNING A clearly labeled emergency shut-off switch for the pump must be in an easily accessible, obvious place. Make sure users know where it is and how to use it in case of emergency.

The Virginia Graeme Baker (VGB) Pool and Spa Safety Act creates new requirements for owners and operators of commercial swimming pools and spas.

Commercial pools or spas constructed on or after December 19, 2008, shall utilize:

(A) A multiple main drain system without isolation capability with suction outlet covers that meet ASME/ANSI A112.19.8a Suction Fittings for Use in Swimming Pools, Wading Pools, Spas, and Hot Tubs and either:

(i) A safety vacuum release system (SVRS) meeting ASME/ANSI A112.19.17 Manufactured Safety Vacuum Release systems (SVRS) for Residential and Commercial Swimming Pool, Spa, Hot Tub, and Wading Pool Suction Systems and/or ASTM F2387 Standard Specification for Manufactured Safety Vacuum Release Systems (SVRS) for Swimming pools, Spas and Hot Tubs or

(ii) A properly designed and tested suction-limiting vent system or

(iii) An automatic pump shut-off system.

Commercial pools and spas constructed prior to December 19, 2008, with a single submerged suction outlet shall use a suction outlet cover that meets ASME/ANSI A112.19.8a and either:

(A) A SVRS meeting ASME/ANSI A112.19.17 and/or ASTM F2387, or

(B) A properly designed and tested suction-limiting vent system, or

(C) An automatic pump shut-off system, or

(D) Disabled submerged outlets, or

(E) Suction outlets shall be reconfigured into return inlets.

⚠CAUTION **For Installation of Electrical Controls at Equipment Pad (ON/OFF Switches, Timers and Automation Load Center)**

Install all electrical controls at equipment pad, such as on/off switches, timers, and control systems, etc. to allow the operation (startup, shut-down, or servicing) of any pump or filter so the user does not place any portion of his/her body over or near the pump strainer lid, filter lid or valve closures. This installation should allow the user enough space to stand clear of the filter and pump during system start-up, shut down or servicing of the system filter.

⚠DANGER **HAZARDOUS PRESSURE: STAND CLEAR OF PUMP AND FILTER DURING START UP.**

Circulation systems operate under high pressure. When any part of the circulating system (i.e. locking ring, pump, filter, valves, etc.) is serviced, air can enter the system and become pressurized. Pressurized air can cause the pump housing cover, filter lid, and valves to violently separate which can result in severe personal injury or death. Filter tank lid and strainer cover must be properly secured to prevent violent separation. Stand clear of all circulation system equipment when turning on or starting up pump.

Before servicing equipment, make note of the filter pressure. Be sure that all controls are set to ensure the system cannot inadvertently start during service. Turn off all power to the pump. **IMPORTANT: Place filter manual air relief valve in the open position and wait for all pressure in the system to be relieved.**

Before starting the system, fully open the manual air relief valve and place all system valves in the "open" position to allow water to flow freely from the tank and back to the tank. Stand clear of all equipment and start the pump.

IMPORTANT: Do not close filter manual air relief valve until all pressure has been discharged from the valve and a steady stream of water appears. Observe filter pressure gauge and be sure it is not higher than the pre-service condition.

General Installation Information

- All work must be performed by a qualified service professional, and must conform to all national, state, and local codes.
- Install to provide drainage of compartment for electrical components.
- These instructions contain information for a variety of pump models and therefore some instructions may not apply to a specific model. All models are intended for use in swimming pool applications. The pump will function correctly only if it is properly sized to the specific application and properly installed.

⚠WARNING Pumps improperly sized or installed or used in applications other than for which the pump was intended can result in severe personal injury or death. These risks may include but not be limited to electric shock, fire, flooding, suction entrapment or severe injury or property damage caused by a structural failure of the pump or other system component.

Pumps and replacement motors that are single speed and one (1) Total HP or greater cannot be sold, offered for sale, or installed in a residential pool for filtration use in California, Title 20 CCR sections 1601-1609.

CUSTOMER SERVICE / TECHNICAL SUPPORT

If you have questions about ordering Pentair replacement parts, and pool products, please contact:

Customer Service and Technical Support, USA
(8 A.M. to 4:30 P.M. — Eastern/Pacific Times)
Phone: (800) 831-7133
Fax: (800) 284-4151

Web site
Visit *www.pentair.com* for information about Pentair products.

Sanford, North Carolina (8 A.M. to 4:30 P.M. ET)
Phone: (919) 566-8000
Fax: (919) 566-8920

Moorpark, California (8 A.M. to 4:30 P.M. PT)
Phone: (805) 553-5000 (Ext. 5591)
Fax: (805) 553-5515

TABLE OF CONTENTS

Important Pump Warning and Safety Instructions ..... **i**

Pump Overview **1**
- Drive Assembly and Control Panel 1
- External Control 1
- Motor Features 1
- Drive Features 1

Installation **2**
- Location 2
- Piping 2
- Electrical Requirements 2
- Optional Keypad Relocation Kit 2
- Fittings and Valves 2
- Electrical Installation 3
  - Wiring, Grounding and Bonding 3
- Connecting to an Automation System 4

Operating the Pump **5**
- Default Filtration Speed 5
- Priming the Pump 5
- Using the Operator Control Panel 6
- Stopping and Starting the Pump 7
- Adjust and Save a Pump Speed 7
- Operating the Pump at Preset Speeds 7
- Pump Operating Modes 7
- Control Panel: Pump Menu Guide 8

Pump Settings **9**
- Set Date and Time 9
- Set AM/PM or 24 Clock 9
- Set Min/Max Speeds 9
- Pump Address 9
- Set Screen Contrast 10
- Set Control Panel Language 10
- Set Temperature Unit 10
- Password Protection 10
- Setting Password 11

Setting Speeds 1-8 ..... **11**
- Pump Operating Modes 11
- Set Speeds 1-4 in Manual Mode 12
- Set Speeds 1-4 in Egg-Timer Mode 12
- Set Speeds 1-8 in Schedule Mode 12

External Control **13**

Features **14**
- Time Out 14
- Quick Clean/Only High Speed Override Feature 14

Priming **14**
- Priming Features 15
- Setting Priming Features 16
- Disabling Priming with an Automation System 16

Thermal Mode **17**

Maintenance **18**
- Pump Strainer Basket 18
- Cleaning the Pump Strainer Basket 18
- Winterizing 18

Servicing **19**
- Motor and Drive Care 19
- Shaft Seal Replacement 19
- Pump Disassembly 19
- Pump Reassembly 20
- Drive Assembly Removal and Installation 20

Troubleshooting **22**
- Alerts and Warnings 22
- Troubleshooting Chart 23

Replacement Parts **25**
- Illustrated Parts List 25

Technical Data **26**
- Pump Dimensions 26
- Electrical Specifications 26
- Pump Performance Curves (IntelliFlo i1) 26
- Pump Performance Curves (IntelliFlo i2) 27
- Pump Performance Curves (3HP IntelliFlo) 27
- Operator Control Panel Quick Reference Guide 28

PUMP OVERVIEW

The IntelliFlo® Variable Speed Pump can be programmed to run at specific speeds and time intervals for maximum operating efficiency and energy conservation for a variety of inground pools.

- The pump can operate from 450 RPM to 3450 RPM with four preset speeds of 750, 1500, 2350 and 3110 RPM
- The pump can be adjusted from the control panel to run at any speed between 450 RPM to 3450 RPM for different applications
- Up to 8 programmable speeds
- Pump control panel alarm LED and error messages warn the user against under and over voltage, high temperature, over current and freezing
- Communicates with Pentair Automation Systems or Communication Center via a two-wire RS-485 cable connection
- Programmable priming mode with automatic detection of prime for easy start-up
- Compatible with most cleaning systems, filters, and jet action spas
- WEF Values
  EC-011028: WEF 6.9 THP 3.95
  011059 and EC-011059: WEF 7.5 THP 3.95
  011060 and EC-011060: WEF 6.9 THP 3.95

Drive Assembly and Control Panel

The IntelliFlo pump drive is designed to produce maximum motor operational efficiency. The drive controls the motor's rotational speed by controlling the frequency of the supplied current. It also protects the motor and pump from operating outside of their intended operating parameters.

The control panel can be mounted on the pump in four different directions in order to provide the user the best access. The control panel can also be mounted in a more convenient location with the help of the keypad relocation kit (P/N 356904Z).

External Control

Pentair Automation Systems and Communication Centers can remotely control the IntelliFlo pump. The pump's communications address and other functions are accessible from the pump's control panel.

- RS-485 communication cable included
- IntelliComm® Communication Centers control one IntelliFlo pump using the 4 External Control programs.
- Refer to your automation system manual for further details on how to connect and use a Pentair Automation System with your variable speed pump(s).

Motor Features

- High-Efficiency Permanent Magnet Synchronous Motor (PMSM)
- Superior speed control
- Operates at lower temperatures due to high efficiency
- Designed to withstand outdoor environment
- Totally Enclosed Fan Cooled (TEFC) Motor
- 56 Square Flange
- Low noise

Drive Features

- Active Power Factor Correction
- Rotatable Keypad
- Easy Overhead Wiring
- High Drive Operational Efficiency

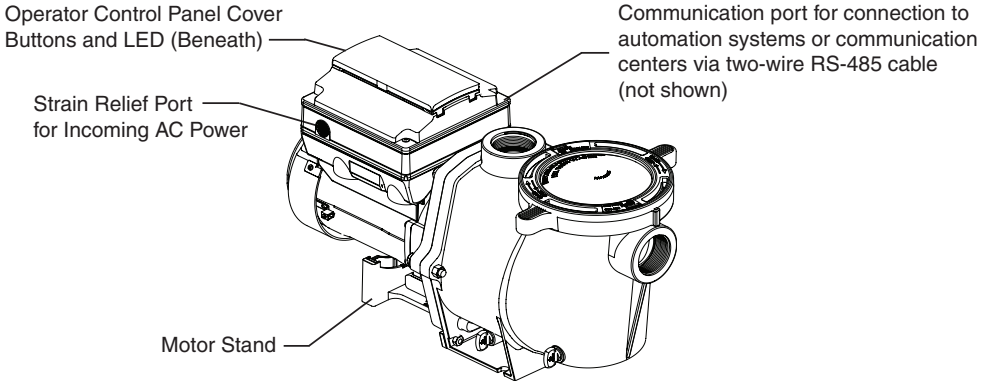

Variable Speed Drive Assembly

INSTALLATION

Only a qualified plumbing professional should install the IntelliFlo® Variable Speed Pump. Refer to *"Important Pump Warning And Safety Instructions"* on pages i - ii for additional installation and safety information.

Note: The IntelliFlo pump cannot be connected in series with other pumps.

Location

Note: Do not install this pump within an outer enclosure or beneath the skirt of a hot tub or spa unless marked accordingly.

Note: Ensure that the pump is mechanically secured to the equipment pad.

Be sure the pump location meets the following requirements:

1. Install the pump as close to the pool or spa as possible. To reduce friction loss and improve efficiency, use short, direct suction piping returns.
2. Install a minimum of 5 feet (1.5 meters) from the inside wall of the pool and spa. Canadian installations require a minimum of 9.8 feet (3 meters) from pool water level.
3. Install the pump a minimum of 3 feet (0.9 meters) from the heater outlet.
4. Do not install the pump more than 10 feet (3.1 meters) above the water level.
5. Install the pump in a well ventilated location protected from excessive moisture (i.e., rain gutter downspouts, sprinklers, etc.)
6. Install the pump with a rear clearance of at least 3 inches (76.2 mm) so that the motor can be removed easily for maintenance and repair. See **Figure 1**.

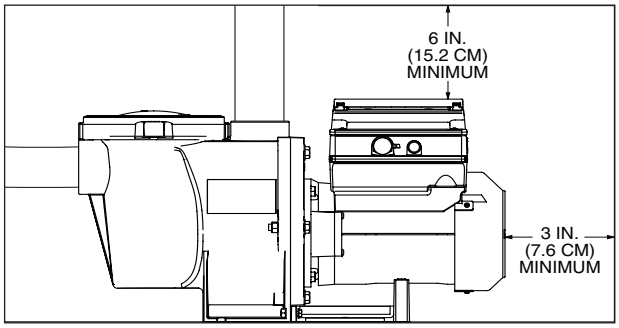

Figure 1: Pump Rear and Overhead Clearance

Piping

1. For improved pool plumbing, it is recommended to use a larger pipe size. When installing the inlet and outlet fittings (male adaptors), use thread sealant.
2. Piping on the suction side of the pump should be the same or larger than the return line diameter.
3. Plumbing on the suction side of the pump should be as short as possible.
4. For most installations Pentair recommends installing a valve on both the pump suction and return lines so that the pump can be isolated during routine maintenance. However, it is recommended that a valve, elbow or tee installed in the suction line should be no closer to the front of the pump than five (5) times the suction line pipe diameter. See **Figure 2**.

   Example:
   A 2 inch pipe requires a 10 inch (254 mm) straight run in front of the suction inlet of the pump). This will help the pump prime faster and last longer.

   Note: DO NOT install 90° elbows directly into the pump inlet or outlet.

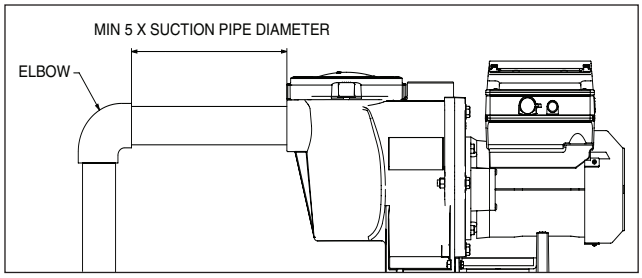

Figure 2: Recommended Piping

Electrical Requirements

- Install all equipment in accordance with the National Electrical Code and all applicable local codes and ordinances.
- A means for disconnection must be incorporated in the fixed wiring in accordance with the wiring rules.

Optional Keypad Relocation Kit

In special cases when the user lacks easy or convenient access to the IntelliFlo® Variable Speed Pump, a Keypad Relocation Kit (P/N 356904Z [Almond] or P/N 356905Z [Black]) may be purchased from your local pool equipment supplier. This kit allows the user to remove the keypad cover from the top of the drive and mount the keypad in a fixed location with better access.

For installation instructions refer to the *Keypad Relocation Kit Installation Instructions* provided with the kit.

Fittings and Valves

1. Do not install 90° elbows directly into pump inlet.
2. Flooded suction systems should have gate valves installed on suction and discharge pipes for maintenance, however, the suction gate valve should be no closer than five times the suction pipe diameter as described in this section.
3. Use a check valve in the discharge line when using this pump for any application where there is significant height to the plumbing after the pump.
4. Be sure to install check valves when plumbing in parallel with another pump. This helps prevent reverse rotation of the impeller and motor.

Electrical Installation

WARNING

RISK OF ELECTRICAL SHOCK OR ELECTROCUTION. This pump must be installed by a licensed or certified electrician or a qualified service professional in accordance with the National Electrical Code and all applicable local codes and ordinances. Improper installation will create an electrical hazard which could result in death or serious injury to users, installers, or others due to electrical shock, and may also cause damage to property.

Always disconnect power to the pump at the circuit breaker before servicing the pump. Failure to do so could result in death or serious injury to service people, users or others due to electric shock.

Read all servicing instructions before working on the pump.

Note: ALWAYS reinstall the drive lid onto the field wiring compartment when leaving the pump unsupervised during servicing. This will prevent foreign matter (i.e. rainwater, dust, etc.) from accumulating in the drive.

Note: When connecting the pump to a Pentair Automation System, continuous power must be supplied to the pump by connecting it directly to the circuit breaker. When using an automation system, be sure that no other lights or appliances are on the same circuit.

Wiring

1. Be sure all electrical breakers and switches are turned off before wiring motor.

   WARNING **STORED CHARGE** - Wait at least sixty (60) seconds before servicing.

2. Be sure that the supply voltage meets the requirements listed on the motor nameplate. If these requirements are not met, permanent motor damage may occur.
3. For wiring sizes and general guidelines for proper electrical installation, please follow the specifications defined in the National Electric Code and any local codes as required.
4. Use strain relief and be sure all electrical connections are clean and tight.
5. Cut the wires to the appropriate length so they do not overlap or touch when connected.
6. Reinstall the keypad cover after wiring the pump by plugging the cover back into the drive wiring connection and re-seating the keypad cover in the desired orientation with the four (4) corner screws.

   Note: Ensure that the keypad cable is not pinched between the drive and keypad cover during re-seating.

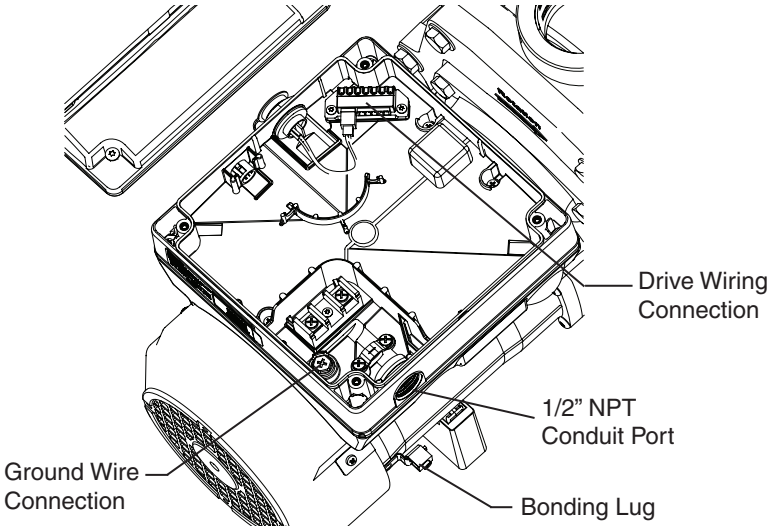

Field Wiring Compartment

Grounding

1. Permanently ground the motor using the green ground screw, as shown below. Use the correct wire size and type specified by National Electrical Code. Be sure the ground wire is connected to an electrical service ground.
2. The pump should be permanently connected to either a circuit breaker, 2-pole timer or 2-pole relay.

   Note: If AC power is supplied by a GFCI circuit breaker, the pump should be wired on its own independent circuit **unless the pump is operated in tandem with a Pentair salt chlorine generator.**

Bonding

1. Bond the motor to the structure in accordance with the National Electrical Code. Use a solid copper bonding conductor not smaller than 8 AWG. For Canadian installations, a 6 AWG or larger solid copper bonding conductor is required. Run a wire from the external bonding screw or lug to the bonding structure.
2. Connect the wire from the accessible bonding lug on the motor to all metal parts of the swimming pool, spa, or hot tub structure and to all electrical equipment, metal conduit, and metal piping within 5 feet (1.52 meters) of the inside walls of the swimming pool, spa, or hot tub. Run a wire from the external bonding screw or lug to the bonding structure.

Note: When the pump is started and stopped by removing power with a relay or timer, a two-pole device should be used to apply and remove power to both POWER LINE TERMINALS.

Pentair offers 2-Pole 20 Amp GFCI breakers (P/N PA220GF) which offer personnel protection while meeting 2008 to current NEC Standards for Pool Pumps.

Connecting to an Automation System

All IntelliFlo® Variable Speed Pumps are compatible with Pentair Automation Systems.

An RS-485 communication cable is provided with the pump and will be used to connect the pump to a Pentair automation system.

Refer to the automation system manual for further details on how to connect and use the system with your variable speed pump.

OPERATING THE PUMP

NOTE: Speed 1 is the default filtration speed.

NOTE: When setting up the IntelliFlo® Variable Speed Pump, the user must set the pump's internal clock and establish an operation schedule by following the steps in this manual. Please refer to user's guide sections: 'Set Time' (page 9) and 'Set Speeds 1-8 in Schedule Mode' (page 12) to schedule a time to run the pump.

⚠CAUTION This pump is shipped with Priming mode ENABLED. Unless the Priming settings are changed in the menu, **be aware that the pump will speed up to the maximum speed when the pump is powered on for the first time, and the Start/Stop button is pressed.** To change the maximum speed of the pump, refer to page 9.

Before turning the pump ON, be sure the following conditions are met:
1. Open filter air relief valve.
2. Open valves.
3. Pool return is completely open and clear of any blockages.
4. Water in the pump basket.
5. Stand clear of the filter or other pressurized vessels.

Priming the Pump

Prime the pump before starting the pump for the first time. Remove the lid and fill the basket with water. The pump basket must be filled with water before initial start up or after servicing.

Follow the steps below to prime the pump for start up:

1. Press **Start/Stop** to stop the pump. Disconnect the pump main power supply and communication cable.
2. Close all valves in suction and discharge pipes. Relieve all pressure from the system.
3. Remove the pump lid and locking ring.
4. Fill the pump strainer pot with water.
5. Reassemble the pump lid and locking ring onto the strainer basket. The pump is now ready to prime.
6. Open all valves in suction and discharge pipes.
7. Open the filter air relief valve and stand clear of the filter.
8. Connect power to the pump. Be sure green power light is on.
9. Press **Start/Stop** to start the pump. The pump will enter into priming mode (if enabled) and speed up to the maximum speed set in the pump menu settings.
10. When water comes out of the filter air relief valve, close the valve. The system should now be free of air and recirculating water to and from the pool.
11. Do not allow your pump to run longer than 30 minutes time without developing full flow. If the pump does not prime, check your priming settings on the control panel or see the "Troubleshooting" section on pages 22-24.

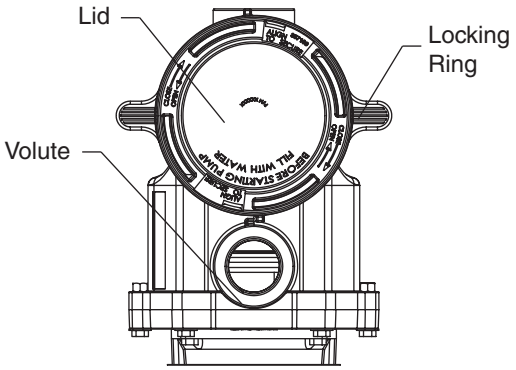

Top View

Priming Features

The default priming setting is ENABLED.
The pump also allows you to set the following from the operator control panel:

- Priming speed
- Priming range (1-10)
- Priming delay

Set up instructions on page 16.

⚠CAUTION Do not add chemicals to the system directly in front of pump suction. Adding undiluted chemicals may damage the pump and will void the warranty.

⚠CAUTION This is a variable speed pump. Typically the lower speeds are used for filtration and heating. The higher speeds can be used for spa jets, water features, and priming.

⚠CAUTION DO NOT run the pump dry. If the pump is run dry, the mechanical seal will be damaged and the pump will start leaking. If this occurs, the damaged seal must be replaced. ALWAYS maintain proper water level in your pool (half way up skimmer opening). If the water level falls below the skimmer opening, the pump will draw air through the skimmer, losing the prime and causing the pump to run dry, resulting in a damaged seal. Continued operation in this manner could cause a loss of pressure, resulting in damage to the pump case, impeller and seal and may cause property and personal injury.

Using the Operator Control Panel

Use the operator control panel to start and stop the IntelliFlo® Variable Speed Pump, program, set, and change speeds (RPM), and access pump features and settings.

Controls and LEDs on Keypad

1. **Button 1:** Press to select Speed 1 (750 RPM). LED on indicates Speed 1 is active.
2. **Button 2:** Press to select Speed 2 (1500 RPM). LED on indicates Speed 2 is active.
3. **Button 3:** Press to select Speed 3 (2350 RPM). LED on indicates Speed 3 is active.
4. **Button 4:** Press to select Speed 4 (3110 RPM). LED on indicates Speed 4 is active.
5. **Back:** Goes one step back in menu; exits without saving current setting.
6. **Save:** Saves current menu item setting. When a parameter has been adjusted the "Save?" icon will be displayed.
7. **Menu:** Accesses the menu items when and if the pump is stopped.
8. **Select:** Press to select the currently displayed option on the screen.
9. **Arrow buttons:**
   - **Up arrow:** Move one level up in the menu or increase a digit when editing a setting.
   - **Down arrow:** Move one level down in the menu or decrease a digit when editing a setting.
   - **Left arrow:** Move cursor left one digit when editing a setting.
   - **Right arrow:** Move cursor right one digit when editing a setting.
10. **Quick Clean:** Pump increases to a higher RPM (for vacuuming, cleaning, adding chemicals, etc.). LED light is on when active.
11. **Time Out:** Allow the pump to remain in a stopped state for a set period of time before resuming normal operation. LED is on when active.
12. **Start/Stop button:** To start or stop the pump. When LED is on, the pump is running or in a mode to start automatically.
13. **Reset button:** Reset alarm or alert.
14. **LEDs:**
    - **On:** Green light when pump is powered on.
    - **Warning:** On if warning condition is present.
    - **Alarm:** Red LED on if alarm condition occurs. *See "Alerts and Warnings" on page 22.*
15. **Control Panel LCD Screen:**
    - **Line 1:** Key icon indicates password protection mode is active. If password protect is not enabled, no key icon is displayed. Also shows current time of day. Active cursors display when arrow key input is available.
    - **Line 2:** Displays current pump speed (RPM).
    - **Line 3:** Countdown time and watts
    - **Line 4:** Current pump status and current feature. "Save?" will display on this line when a parameter adjustment can be saved.

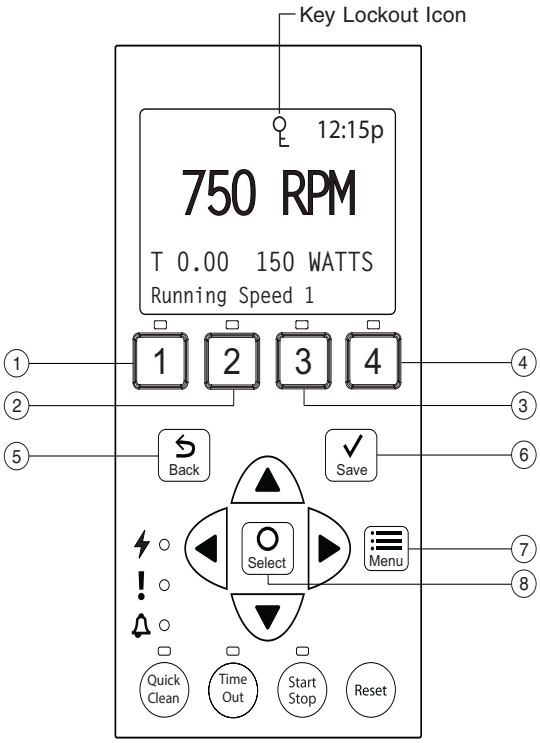

Control Panel #1-8

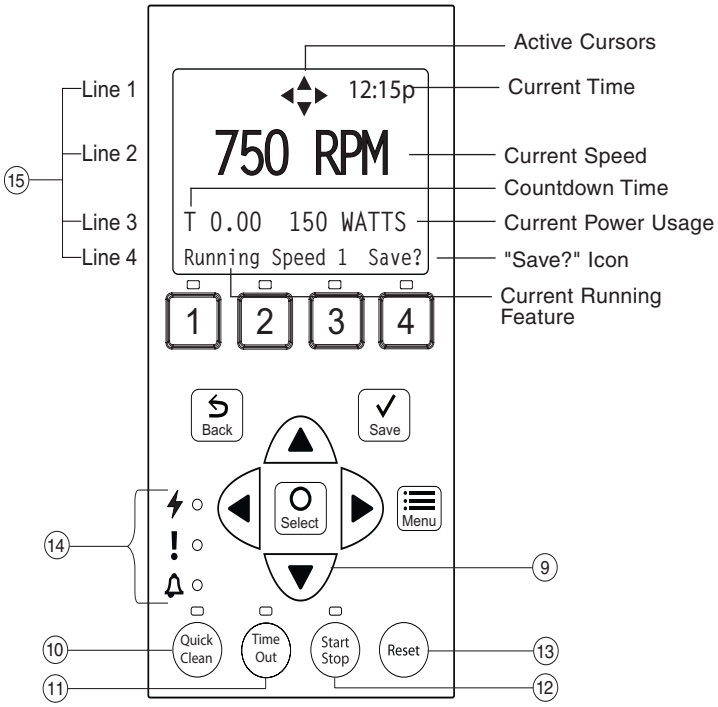

Control Panel #9-15

Note: Always close the keypad cover after using the keypad.

Note: Using screwdrivers or pens to program the pump will damage the keypad overlay. Use your fingers only when programming the pump.

Stopping and Starting the Pump

Starting the Pump

1. Be sure the pump is powered on and the green power LED is on.
2. Select one of the speed buttons, then press the **Start/Stop** button (LED on) to start the pump. The pump will go into priming mode if priming feature is enabled.

Stopping the Pump

1. Press **Start/Stop** to stop the pump.

When servicing equipment (filters, heaters, chlorinators etc.), disconnect the communication cable, and switch OFF circuit breaker to remove power from the pump.

Note: The pump can automatically restart if the communication cable is connected.

Adjusting and Saving a Pump Speed

1. While the pump is running, press the **Up** or **Down** arrow to adjust to desired speed setting.
2. Press and hold down a **Speed** button (1-4) for three (3) seconds to save speed to the button or press **Save** to save the speed.

Operating the Pump at Preset Speeds

The pump is programmed with four default speeds of 750, 1500, 2350 and 3110 RPM. Speed buttons 1-4 are for each of the preset speeds as shown below.

1. Be sure the pump is powered on and the green power LED is on.
2. Press the **Speed** button (1- 4) corresponding to the desired preset speed and release quickly. The LED above the button will turn on.
3. Press **Start/Stop**. The pump will quickly change to the selected preset speed.

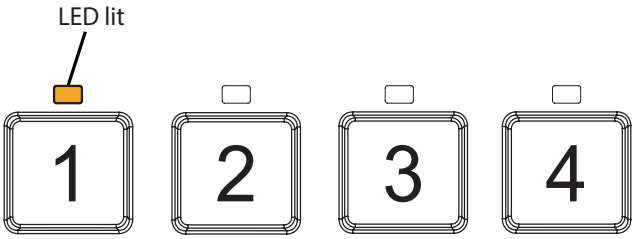

Pump Operating Modes

The IntelliFlo® Variable Speed Pump can be programmed in three different modes:

Manual, Schedule, and Egg Timer.

Speeds 1-4 can be programmed in all three modes. Speeds 5-8 can only be programmed in Schedule mode since there are no buttons on the control panel for Speeds 5-8. The default setting for Speeds 5-8 is “Disabled”.

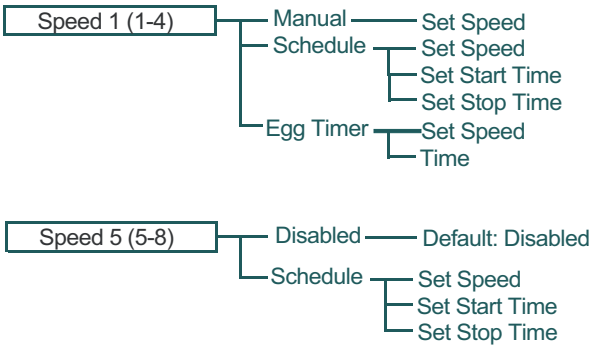

Speed Menu Tree Options

Manual

Assigns a speed to one of the four Speed buttons on the control panel. This mode can only be used for speeds 1-4.

To operate in Manual mode, press one of the four speed buttons and then press the **Start/Stop** button. The pump will run the assigned speed for that speed button.

Egg Timer

Speeds 1-4 can be programmed to run at a certain speed and for a duration of time once a speed button is pressed.

Speeds 3 and 4 are Egg Timers by default. This prevents the pump from running at a speed higher than half of the maximum speed indefinitely. If you desire a different method of operation, speeds 3 and 4 can be changed to Manual mode in the control menu.

To operate in Egg Timer mode, press a speed button and then press **Start/Stop**. The pump will run that speed for the set amount of time and then turn off.

Schedule

Program speeds 1-8 start and stop at a specific time during a 24 hour period. Speeds programmed in Schedule mode will override any manually selected speed (speeds set by manually pressing any of the speed buttons on the control panel).

Operator Control Panel: Pump Menu Guide

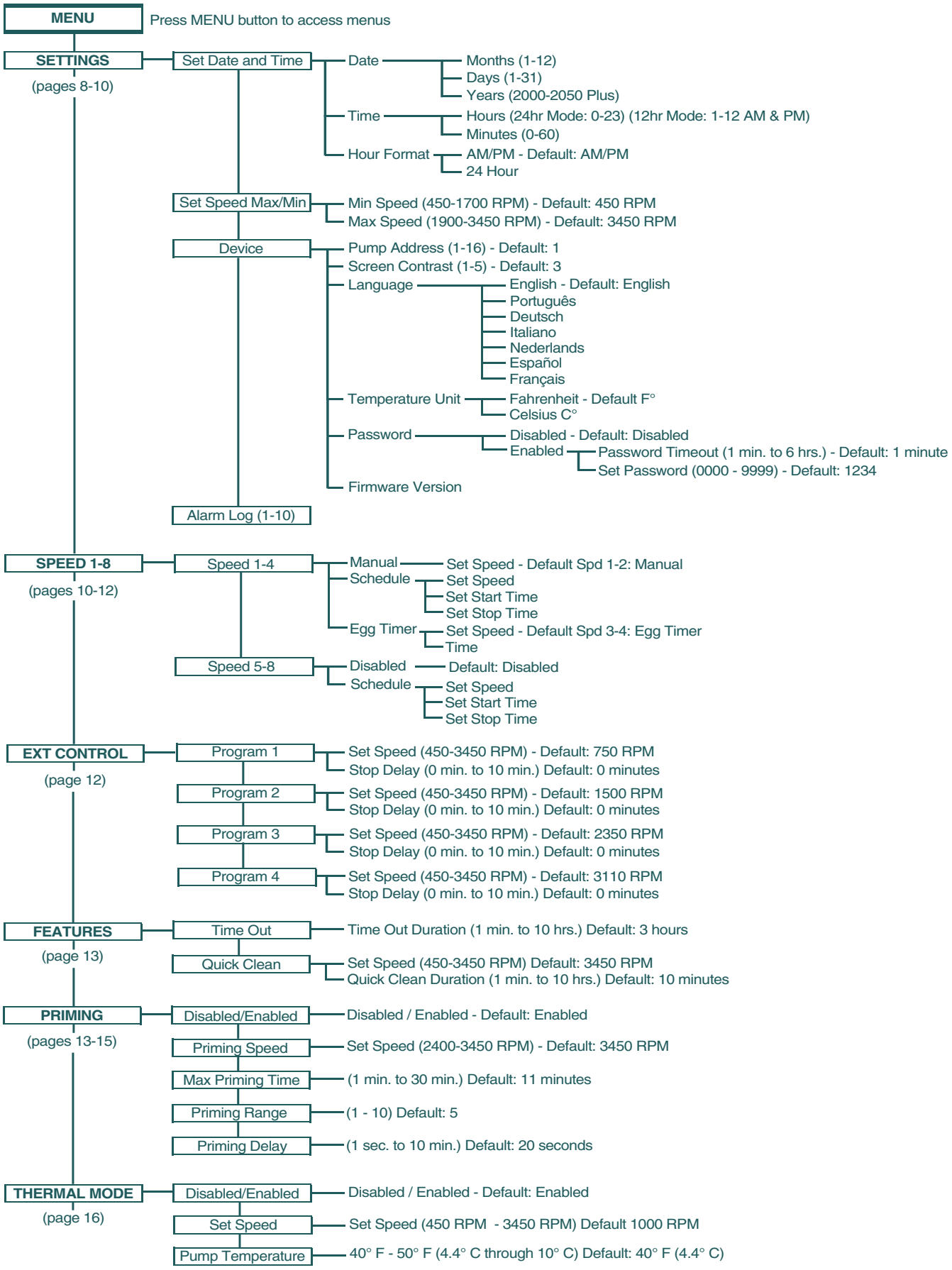

Pump Menu: Settings

Set Date and Time

The time controls all scheduled times, functions, and programmed cycles and stores the correct time for up to 96 hours after power is turned off. Reset if the power is off longer than 96 hours.

1. Check that the green power LED is on.
2. Press **Menu**.
3. Press **Select** to select “Settings”.
4. Use the **Up** or **Down** arrows to scroll to “Date and Time” and press **Select**.
5. Press **Select** again and use **Up** or **Down** arrows to set the date.
6. Press **Save** to save user input and return to "Date and Time."
7. Use the **Up** or **Down** arrows to scroll to “Time” and press **Select**.
8. Use the **Up** or **Down** arrows to scroll to set the time.

   Note: To set AM/PM or a 24 hour clock see the next section "Set AM/PM or 24 Hour Clock."
9. Press **Save** to save. To cancel any changes, press **Back** to exit without saving.
10. Press **Back** to exit.

Set AM/PM or 24 Hour Clock

To change the time from a 12 hour clock (AM/PM) to a 24 hour clock:

1. Press **Menu**.
2. Press **Select** to select “Settings”.
3. Use the **Up** or **Down** arrows to scroll to “Date and Time" and press **Select**.
4. Use the **Up** or **Down** arrows to scroll to "AM/PM" and press **Select**.
5. Use the **Up** or **Down** arrows to scroll to choose between 24 hr. and AM/PM.
6. Press **Save** to save. To cancel any changes, press **Back** to exit without saving.
7. Press **Back** to exit.

Set Minimum Speed (RPM)

The minimum pump speed can be set from 450 RPM to 1700 RPM. The default setting is 450 RPM.

1. Check that the green power LED is on.
2. Press **Menu**.
3. Press **Select** to select “Settings”.
4. Use the **Up** or **Down** arrows to scroll to “Min/Max”.
5. Use the **Up** or **Down** arrows to scroll to “Set Min Spd”.
6. Press **Select** to change the setting. The cursor will appear in the first number column (ones).
7. Press the **Up** or **Down** arrows to change the minimum speed setting from 450 to 1700 RPM.
8. Press **Save** to save. To cancel, press **Back** to exit edit mode without saving.
9. Press **Back** to exit.

Set Maximum Speed (RPM)

The maximum speed can be set from 1900 RPM to 3450 RPM (default is 3450). Use this setting to set the maximum running speed of the IntelliFlo® Variable Speed Pump.

1. Check that the green power LED is on.
2. Press **Menu.**
3. Press **Select** to select “Settings”.
4. Use the **Up** or **Down** arrows to scroll to “Min/Max”.
5. Use the **Up** or **Down** arrows to scroll to “Set Max Spd”.
6. Press **Select** to change. The cursor will appear in the first number column (ones).
7. Press **Up** or **Down** arrows to change the maximum speed setting from 1900 to 3450 RPM.
8. Press **Save** to save. Press **Back** to exit. To cancel, press the **Back** to exit without saving.

Note: Maximum Speed will limit Priming Speed, except in one case. If the Maximum Speed is set below the lowest available Priming Speed (2350 RPM) then the pump will exceed the Maximum Speed while the priming feature is running. This prevents the pump from having trouble priming if the Maximum Speed is set this low. If this is a problem, priming can be disabled in the Priming Menu (see “Priming” section on page 14).

Pump Address

Use this setting if your pump is connected via the RS-485 COM port to a Pentair automation system.

The default pump address is #1 and only needs to be changed when there is more than one pump on an automation system. When multiple pumps are on the same system, you may change each pump’s address to allow the automation system to send a command to the correct pump. The pump address can be set from 1-16.

Refer to the automation system manual for further details on how to connect and use an automation system with your variable speed pump.

1. Be sure the green power LED is on and the pump is stopped.
2. Press **Menu.**
3. Press **Select** to select “Settings”.
4. Use the **Up** or **Down** arrows to scroll to “Device” and press **Select**.
5. Use the **Up** or **Down** arrows to scroll to “Pump Address” and press **Select**.

MENU

SETTINGS — **Pump Menu: Settings**

Pump Address (cont.)

6. Press **Up** or **Down** arrows to change the address number from 1-16.
7. Press **Save** to save. To cancel any changes, press **Back** to exit without saving.
8. Press **Back** to exit.

Set Screen Contrast

The default setting for the LCD screen is 3. Screen contrast levels can be adjusted from 0 to 7 units for low or high lighting conditions.

Note: Changes to the contrast setting do not update instantaneously. Changes to this setting must be saved before the contrast level changes.

1. Check that the green power LED is on.
2. Press **Menu**.
3. Press **Select** to select “Settings”.
4. Use the **Up** or **Down** arrow to scroll to “Device” and press **Select**.
5. Use the **Up** or **Down** arrow to scroll to “Contrast Level."
6. Press **Select**. Screen will show current contrast setting number. Use **Up** or **Down** to change number.
7. Press **Save** to save. To cancel any changes, press **Back** to exit without saving.
8. Press the **Back** button to exit.

Set Control Panel Language

To access the language menu:

1. Check that the green power LED is on.
2. Press **Menu** and press **Select** to select “Settings”.
3. Use the **Up** or **Down** arrows and scroll to “Device” and press **Select**.
4. Use the **Up** or **Down** arrows to scroll to “Select Language and press **Select**.
5. Use the **Up** or **Down** arrows to choose the desired language.
6. Press **Save** to select the control panel language. To cancel any changes, press **Back** to exit without saving.
7. Press **Back** to exit.

Set Temperature Unit

The default setting is Fahrenheit (°F). The pump can be set to either Celsius (°C) or Fahrenheit (°F).

1. Check that the green power LED is on.
2. Press **Menu**.
3. Press **Select** to select “Settings”.
4. Use the **Up** or **Down** arrows to scroll to “Device” menu item. Press **Select**.
5. Use **Up** or **Down** arrows to scroll to "Temperature Units" and press **Select**.
6. Use **Up** or **Down** arrows to choose Celsius (°C) or Fahrenheit (°F).
7. Press **Save** to save. To cancel any changes, press **Back** to exit without saving.
8. Press **Back** to exit.

Password Protection

The default setting for password protection is disabled. When this feature is enabled, the pump display will prompt for the password before allowing access to the control panel and buttons.

The entered password is any combination of four (4) digits.

- The pump can always be stopped by pressing **Start/Stop**, even when password protection is enabled.
- Password protection cannot be turned back on with **Start/Stop** while running in manual mode.
- Pressing **Start/Stop** when the pump is off will return it back to the Running Cycles Mode and run at the next scheduled run time. If the present time is within the scheduled run time, the pump will run the scheduled speed.
- All functions including programming are disabled in Password Protection Mode.
- Screen will read “Enter Password” if any button other than the **Start/Stop** button is pressed
- Key icon displayed in the upper left side of the screen when Password Protection is on.

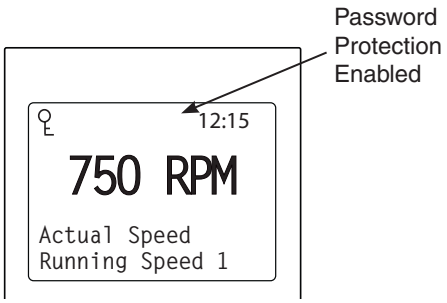

Pump Menu: Settings

Setting Password

1. Check that the green power LED is on.
2. Press **Menu**. Press **Select** to select “Settings”.
3. Use the **Up** or **Down** arrow to scroll to “Device”.
4. Press **Select.**
5. Press **Up** or **Down** arrow to scroll to “Password”. The default setting is “Disabled”.
6. Press **Select.**
7. Press **Up** or **Down** arrow to change the setting to “Enabled”. Press **Save** to save.
8. Press the **Down** arrow. “Password Timeout” will be displayed. The factory default time is 1 minute. This means the IntelliFlo® Variable Speed Pump will go into Password Protection mode 1 minute after the last control panel key is pressed.
9. Press **Select** to change time setting from 1 minute to 6 hours and press **Save** to save.
10. Press the **Down** arrow and then press **Select** on “Enter Password” to change the setting.
11. Press the **Left** or **Right** arrows to move cursor and press the **Up** or **Down** arrow to change the password number to desired setting.
12. Press **Save** to save. To cancel any changes, press **Back** to exit without saving.

Entering Password

1. Press any button (besides the speed button) to prompt the screen for a password.
2. To enter password, use the **Left** and **Right** arrows to move the cursor and the **Up** and **Down** arrow button to scroll through the digit then press **Save** to confirm.

Pump Menu: Speeds 1-8

Pump Operating Modes

The IntelliFlo® Variable Speed Pump can be programmed in three different modes:

Manual, Schedule, and Egg Timer. Speeds 1-4 can be programmed in all three modes. Speeds 5-8 can only be programmed in Schedule mode since there are no buttons on the control panel for Speeds 5-8. The default setting for Speeds 5-8 is “Disabled”.

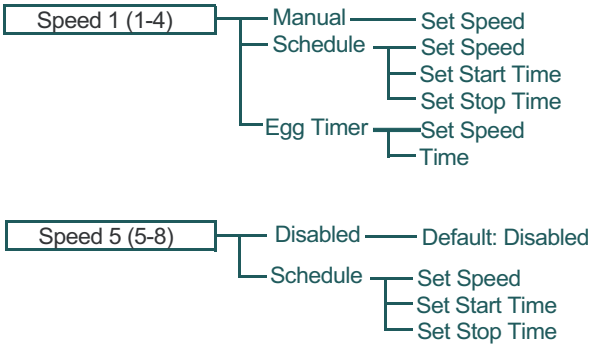

Speed Menu Tree Options

Manual

Assigns a speed to one of the four Speed buttons on the control panel. This mode can only be used for speeds 1-4.

To operate in Manual mode, press one of the four speed buttons and then press the **Start/Stop** button. The pump will run the assigned speed for that speed button.

Egg Timer

Speeds 1-4 can be programmed to run at a certain speed and for a duration of time once a speed button is pressed.

Speeds 3 and 4 are Egg Timers by default. If you desire a different method of operation, speeds 3 and 4 can be changed to Manual mode in the control menu.

To operate in Egg Timer mode, press a speed button and then press **Start/Stop**. The pump will run that speed for the set amount of time and then turn off.

Schedule

Program speeds 1-8 start and stop at a specific time during a 24 hour period. Speeds programmed in Schedule mode will override any manually selected speed (speeds set by manually pressing any of the speed buttons on the control panel).

MENU

SPEED 1-8 — **Pump Menu: Speeds 1-8**

Set Speeds in Manual Mode (Speeds 1-4 Only)

1. Press **Menu**.
2. Use **Up** or **Down** arrows to scroll to “Speed 1-8”, then press **Select**.
3. Use **Up** or **Down** arrows to find the speed (1-4) you wish to program, then press **Select**.
4. Speeds 1-2 default setting is Manual. Speeds 3-4 default setting is Egg Timer. To set a speed in Manual mode, press the **Down** arrow (“Set Speed” will display) and press **Select** to change. Use the **Up** or **Down** arrow to adjust speed.
5. Press **Save** to save the new speed setting.

Set Speeds in Egg-Timer Mode (Speeds 1-4 Only)

1. Press **Menu**.
2. Use **Up** or **Down** arrows to scroll to "Speed 1-8", the press **Select**.
3. Use **Up** or **Down** arrow to find the speed (1-4) you wish to program, then press **Select**.
4. Use the **Up** or **Down** arrows to scroll to "Egg-Timer", then press **Select**.
5. To set a speed in Egg-Timer mode, press the **Down** arrow ("Set Speed" will display) and press **Select** to change. Use the **Up** or **Down** arrow to adjust speed.
6. Press **Save** to save the new speed setting.
7. Now press the **Down** arrow ("Set Time" will display) and press **Select** to change. Use the **Up** or **Down** arrows to adjust the time.
8. Press **Save** to save the new time setting.

Manual Mode Menu Screen

Egg Timer Menu Screen

Set Speeds 1-8 in Schedule Mode

In Schedule mode, Speeds 1-8 can be programmed to run a certain speed at a certain time of day. To run a scheduled speed, press **Start/Stop**. The screen will display “Running Schedules” when it is ready to run a scheduled speed. If **Start/Stop** is pressed while a scheduled speed is running, the pump will stop running the scheduled speed. The pump will not continue to run the scheduled speed until the **Start/Stop** button is pressed again.

1. Press **Menu**.
2. Use **Up** or **Down** arrows to scroll to “Speed 1-8”, then press **Select**.
3. Use **Up** or **Down** arrows and press **Select** for the speed you wish to set and schedule.
4. Press **Select** (display will be highlighted) and scroll to “Schedule”.
5. Press **Save**.
6. Press **Down** arrow (“Set Speed” will display) and press **Select** to change. Use the **Up** or **Down** arrow to adjust speed.
7. Press **Save** to save the new speed.
8. Press the **Down** arrow again, “Set Start Time” will display. Press **Select** - the cursor will highlight the minute column.
9. Use the **Up** or **Down** arrow to change the time and the **Left** or **Right** arrow to move cursor from minutes to hours.
10. Press **Save** to save the new start time setting.
11. Press **Down** arrow - “Set Stop Time” will display. Press **Select**. Repeat Steps 8-9 to set stop time.
12. Press **Save** to save the new stop time setting.
13. Press **Start/Stop**.

The IntelliFlo® Variable Speed Pump will prime and begin to run the programmed schedule at the specified start time.

When running in Schedule or Egg Timer mode, the countdown time (T 00:01) showing the hours and minutes remaining is displayed.

MENU
SPEED 1-8

Pump Menu: Speeds 1-8

Set Speeds 1-8 in Schedule Mode (cont.)

Programming Schedule for Constant Run

A speed cannot be programmed with the same start and stop times. To run a speed without stopping, set the Start time one minute after the stop time.

Example: A single speed will run non stop if programmed with a Start Time of 8:00 AM and a Stop time of 7:59 AM.

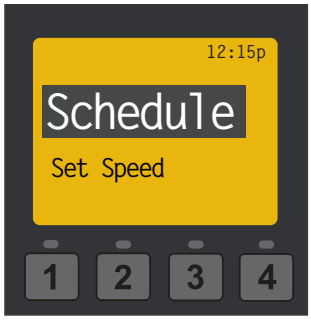

Note: The pump will not run the scheduled speeds until the **Start/Stop** button is pressed (LED on) to place the pump in Schedule mode.

Note: When two speeds are scheduled during the same run time the pump will run the higher RPM Speed regardless of Speed # in use.

Note: The most recent command, Manual or Schedule, takes priority regardless of speed number RPM.

MENU
EXT CONTROL

Pump Menu: External Control

External Control

This function is for programming speeds that will run when the automation control system sends it a command. For example, Terminal 3 and 4 in the automation system will correspond to External Control Program #1. (5 and 6 to Ext Ctrl #2).

The Stop Delay feature allows the user to program the pump to run a Program Speed after the External Control has been deactivated. This feature can be used to provide a cooling down period for the pump after a trigger signal from an installed heater has been deactivated. Each individual Program Speed can have a Stop Delay of 1 to 10 minutes programmed.

Use the External Control feature to program the IntelliComm system power center.

To access the External Control menu:

1. Check that the green power LED is on.
2. Press the **Menu** button.
3. Use **Up** or **Down** arrow to scroll to “Ext. Ctrl.”.
4. Press **Select**. “Program 1” is displayed.
5. Press **Select**. “750 RPM’ is displayed.
6. Press **Select**. The “RPM” number will highlight.
7. Press **Up** or **Down** arrow to change the RPM setting.
8. Press **Save** to save the setting.

   Note: To cancel any changes, press the **Back** button to exit without saving.
9. If you do not wish to program a Stop Delay, continue to step 13. If you do wish to program a Stop delay press **Up** or **Down** arrow to scroll to “Stop Delay”.
10. Press **Select** to set Stop Delay.
11. Press **Up** or **Down** arrows to change the Stop Delay setting. Stop Delay can be set from 0 minutes (disabled) to 10 minutes.
12. Press **Save** to save the setting.

    Note: To cancel any changes, press the **Back** button to exit without saving.
13. Press **Back** to return to set Program 2.
14. Use **Up** or **Down** arrow to scroll to “Program 2”.
15. Repeat Steps 5 through 13 to set Program 2, 3, and 4.

MENU

FEATURES

Pump Menu: Features

Time Out

The Time Out feature keeps the pump from running it's programmed speeds for a set duration adjustable in the menu. The Time Out feature is displayed in hours and minutes (Hrs:Mins).

Once Time Out is finished, the pump will return to its previous mode of operation, the Start/Stop LED will be lit and ready to turn on at the next scheduled run time.

To access the Time Out menu:

1. Check that the green power LED is on.
2. Press **Menu**.
3. Use **Up** or **Down** arrows to scroll to "Features", then press **Select**.
4. Press **Select** to choose "Timeout".
5. Then press **Select** again to choose "Timeout Duration".
6. Press **Select** to change the time. The cursor will highlight the minutes column.
7. Press the **Left** arrow to move cursor to the hours column. Time out can be set from 1 minute to 10 hours.
8. Press **Save** to save the setting.

   Note: To cancel any changes, press **Back** to exit without saving.
9. Press **Back** to exit the menu.

Quick Clean

Note: Quick Clean is the only high-speed override feature of the IntelliFlo® Variable Speed Pump.

This feature can be used to increase the pump speed for vacuuming, cleaning, adding chemicals, after a storm for extra skimming capability.

Press the **Quick Clean** button (LED on) and then **Start/Stop** to start. When the Quick Clean cycle is over, the pump will resume regular schedules and be in "Running Schedule" mode.

To access the Quick Clean menu:

1. Check that the green power LED is on and the pump is stopped.
2. Press **Menu**.
3. Use **Up** or **Down** arrows to scroll to "Features", then press **Select**.
4. Press the **Down** arrow and press **Select** for "Quick Clean".
5. Press **Select** to choose "Set Speed".
6. Press **Select** to highlight the "RPM" first (ones) column and change the speed.
7. Use **Up** or **Down** arrows to change the speed.
8. Press **Save** to save the speed.
9. Press the **Down** arrow again, and press **Select** for "Time Duration".
10. Press **Select** to change the time. The cursor will highlight the minutes column.
11. Use **Up** or **Down** arrows to change the time from 1 minute to 10 hours.
12. Press **Save** to save the time.
13. Press **Back** to exit the menu.

MENU

PRIMING

Pump Menu: Priming

The default setting for Priming is ENABLED. This setting allows the pump to automatically detect if it is primed for startup.

The priming feature increases the pump speed to 1800 RPM and pauses for three (3) seconds. If there is sufficient water flow in the pump basket, the pump will go out of priming mode and run its commanded speed.

If the water flow is not sufficient, the pump speed will increase to the "Max Speed" setting and remain for the priming delay time (default 20 seconds). If there is sufficient water flow in the pump basket at this time, it will exit priming mode and transition to the commanded speed.

If there is still insufficient flow in the pump basket, as determined by the Priming Range setting, the pump will try to prime at the "Priming Speed" for the amount of time set in the "Maximum Priming Time" menu, unless the set "Maximum Speed" is lower than the set "Priming Speed". Once the pump achieves prime, it will resume normal operation after the preset priming delay.

Note: It is possible to set "Maximum Speed" too low for the pump to properly prime. Maximum Speed will limit Priming Speed, except in one case. If the Maximum Speed is set below the lowest available Priming Speed (2350 RPM) then the pump will exceed the Maximum Speed while the priming feature is running. This prevents the pump from having trouble priming if the Maximum Speed is set this low. If this is a problem, priming can be disabled in the Priming Menu.

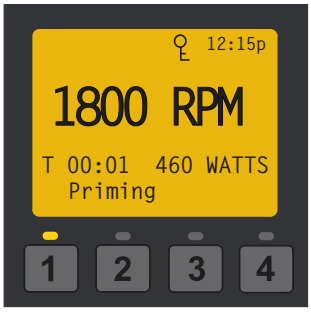

Display during priming

MENU

PRIMING — **Pump Menu: Priming**

Priming Features

DISABLED/ENABLED

Default: ENABLED

Allows IntelliFlo® Variable Speed Pump to automatically detect if pump if is primed for startup. The pump will speed up to 1800 RPM and pause for three (3) seconds - if there is enough water in the basket, the pump will go out of priming mode and run the commanded speed.

SET SPEED

Default: 3450 RPM

The priming speed can be set between 3450 RPM and 2350 RPM. If the pump is on an equipment pad that is close to the water level, it will not need to run at 3450 RPM to successfully prime. The setting can be lowered to prevent running at a higher speed than necessary.

Day to day factors (i.e. local ambient pressure, water/air temperatures, amount of water retained from last system run) can effect priming performance. Because of the frequently changing nature of these factors the priming speed should be set high enough to accommodate environmental and mechanical changes to ensure that the pump can successfully prime. Finding the most effective and efficient speed for your specific needs may take careful testing and evaluation of priming performance.

MAX PRIMING TIME

Default: 11 minutes

The maximum priming time can be set from 1 - 30 minutes. This setting is the amount of time the pump will try to prime before it gives a priming error. If this occurs, fill the pump basket with water and restart the pump.

PRIMING RANGE

Default: 5

Priming range can be set from 1-10. The smaller the range, the more water the pump has to be moving to detect that it is primed. At larger ranges, the pump will detect that it is fully primed while moving less water. If the range is set too high, then the pump may exit Priming mode before it has fully primed. The range will automatically adjust with the priming set speed because the flow rates of the pump will be lower at lower speeds.

PRIMING DELAY

Default: 20 seconds

Priming delay can be set from 1 second to 10 minutes.

If the pump does not have enough water after the automatic priming mode, the pump will increase to the Maximum Speed (under “Pump Settings” on page 9) and run for 20 seconds (or for the time set).

You may need to increase the priming delay to allow the system to stabilize before the pump starts running speeds. If pump continues to show a priming error, increasing the priming delay time might correct this issue.

MENU

PRIMING

Pump Menu: Priming

Setting Priming Features

Note: Priming features are only accessible if priming is “Enabled”.

1. Press **Menu**.
2. Use **Down** arrow to scroll to “Priming” and press **Select.**
3. The factory default is set to priming “Enabled“. To disable, press **Select**.
4. Press **Save** if you have changed the setting - this will save the selection.
5. Press the **Down** arrow - the screen will read “Max Priming Time”.
6. To change from factory default, press **Select.** The cursor will highlight.
7. Use the **Up** or **Down** arrows to change the time from 1 minute to 30 minutes.
8. Press **Save** to save.
9. Press the **Down** arrow - the screen will read “Priming Range”. Default is “5”.
10. Press **Select** to change the priming range. The cursor will highlight the number.
11. Use the **Up** or **Down** arrows to change from 1 to 10. Increasing the number allows the drive to detect prime with less water flow.
12. Press **Save** to save.
13. Press the **Down** arrow - the screen will read “Priming Delay”. Default is 20 seconds.
14. Press **Select** to change the priming delay time.
15. Use the **Up** or **Down** arrows to change from 1 second to 10 minutes.

    CAUTION: Increasing the time causes the pump to stay in the priming mode longer.
16. Press **Save** to save the setting.
17. Press **Back** to exit.

Disabling Priming with an Automation System

When the IntelliFlo® Variable Speed Pump is connected to an automation control system, ***the priming feature on the pump cannot be disabled by the external automation control system only. It must also be disabled on the pump itself.***

If priming is enabled on start up, the pump responds to its internal settings *before* responding to commands from an automation control system.

If the pump is connected to an automation control system and priming is not desired, ***disable the priming feature on both the pump and the automation control system.***

To disable priming with an automation system:

1. Disable the priming feature on the automation control system at the load center or using a system remote. (Refer to the automation control system user’s guide for additional information).
2. Temporarily disconnect the RS-485 communication cable.
3. Open the lid to the control panel to disable priming on the pump. Press **Menu**, use the **Arrow** buttons to scroll and select “Priming”, then select “Disabled” (the factory default is set to “Enabled”). Press **Back** to exit the menu.
4. Once priming is disabled, reinstall the RS-485 communication cable.

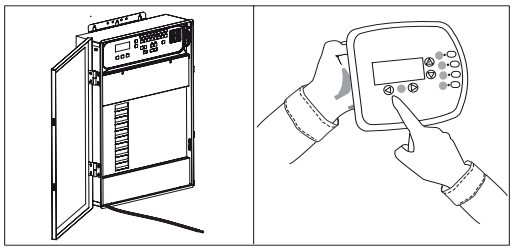

1. Disable priming on automation control system.

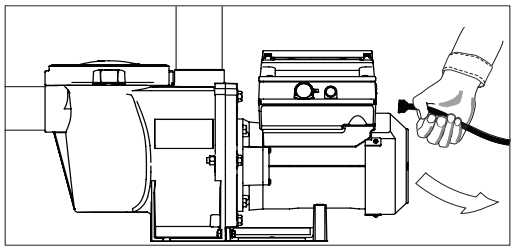

2. Disconnect the RS-485 communication cable.

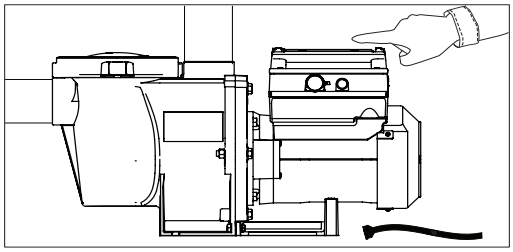

3. Disable priming on pump.

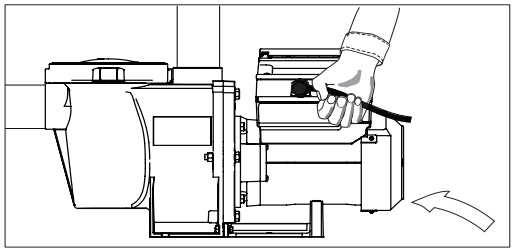

4. Reinstall the RS-485 communication cable.

MENU

THERMAL MODE

Pump Menu: Thermal Mode

The sensor for Thermal Mode is in the drive, on top of the motor. This feature allows you to set a speed (450 RPM - 3450 RPM) that runs when the IntelliFlo® Variable Speed Pump goes into Thermal Mode. The temperature level that you wish Thermal Mode to start can also be set.

IMPORTANT NOTE: This feature is for protection of the pump. Do not depend on the Thermal Mode feature for freeze protection of the pool. Certain situations could cause the pump to sense a different temperature than actual air temperature.

Your automation systems air temperature sensor should be used to sense actual temperature. For example, if the pump is located indoors, the temperature of the room does not indicate the outdoor temperature. The pump does not sense the water temperature.

To access the Thermal Mode menu:

1. Check that the green power LED is on.
2. Press **Menu**.
3. Use the **Down** arrow to scroll to “Thermal Mode” and press **Select**.
4. The factory default for Thermal Mode is “Enabled“. To disable Thermal Mode, press **Select** to highlight “Enabled”.
5. Press the **Up** arrow - “Disabled” is displayed.
6. Press **Save** to save.

Setting the Thermal Mode Pump Speed

To Set Thermal Mode Speed and Pump Temperature:

Note: Thermal Mode features are only accessible if Thermal Mode is “Enabled”.

1. With “Thermal Mode” displayed on the screen, press the **Down** arrow - “Set Speed” is displayed. The factory default is 1000 RPM.
2. Press **Select** to change the speed. The cursor will highlight the first column (ones).
3. Use the **Up** or **Down** arrows to set speed (450 - 3450 RPM).
4. Press **Save** to save the speed.
5. Press the **Down** arrow to Pump Temperature (the temperature the pump will activate Thermal Mode, default is 40° F/4.4° C).
6. Press **Select** to change the setting. The cursor will highlight the first column. Can be set 40° F to 50° F (4.4° C - 10° C).
7. Press **Save** to save the temperature setting.

   Note: To cancel any changes, press **Back** to exit without saving.
8. Press **Back** to exit.

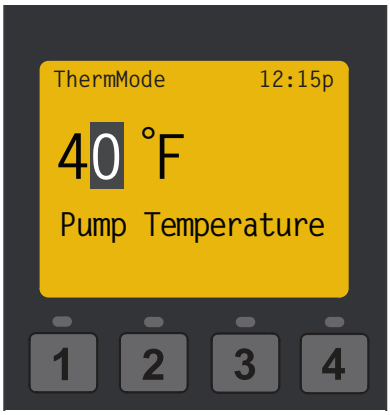

Setting the Thermal Mode Pump Temperature

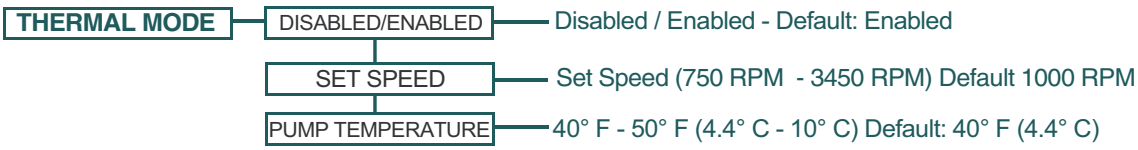

Thermal Mode Menu Options

MAINTENANCE

WARNING **DO NOT** open the strainer pot if IntelliFlo® Variable Speed Pump fails to prime or if pump has been operating without water in the strainer pot. Pumps operated in these circumstances may experience a build up of vapor pressure and may contain scalding hot water. Opening the pump may cause serious personal injury. In order to avoid the possibility of personal injury, be sure the suction and discharge valves are open and strainer pot temperature is cool to touch, then open with extreme caution.

CAUTION To prevent damage to the pump and for proper operation of the system, clean pump strainer and skimmer baskets regularly.

Pump Strainer Basket

The strainer basket (or 'strainer pot'), is located in front of the pump housing. The strainer basket must be kept clean and free of debris. Inspect basket through the lid on the top of the housing. Be sure to visually inspect the strainer basket at least once a week. Dirty strainer baskets reduce filter and heater efficiency and put abnormal stress on the pump motor.

Cleaning the Pump Strainer Basket

1. Press **Start/Stop** button on the pump and turn off the pump at the circuit breaker. Disconnect communication cable from pump.
2. Relieve pressure in the system.
3. Turn the lid and clamp counter-clockwise and remove from the pump.
4. Remove debris and rinse out the basket. Replace the basket if it is cracked.
5. Put the basket back into the housing. Be sure to align the notch in the bottom of the basket with the rib in the bottom of the volute.
6. Fill the pump pot and volute up to the inlet port with water.
7. Clean the lid and clamp, O-ring, and sealing surface of the pump pot.

   Note: It is important to keep the lid O-ring clean and well lubricated.
8. Reinstall the lid by placing the clamp and lid on the pot. Be sure the lid O-ring is properly placed.

   Seat the clamp and lid on the pump then turn clockwise until the locking ring handles are perpendicular to the inlet.
9. Turn the power "ON" at the circuit breaker. Reconnect communication cable from pump.
10. Open the manual air relief valve on the top of the filter. Stand clear of the filter.
11. Wait until all pressure is relieved. Start the pump.
12. Bleed air from the filter until a steady stream of water comes out of the filter air relief valve. Close the manual air relief valve.

WARNING **THIS SYSTEM OPERATES UNDER HIGH PRESSURE**. When any part of the circulating system (e.g., Lock Ring, Pump, Filter, Valves, etc.) is serviced, air can enter the system and become pressurized. Pressurized air can cause the lid to separate which can result in serious injury, death, or property damage.
To avoid this potential hazard, follow above instructions.

Winterizing

To protect the pump electronics from freeze damage, the pump will switch on to generate internal heat as the temperature drops below freezing if Thermal Mode is enabled. *The Thermal Mode feature on the pump is not intended to protect the system plumbing from freezing.*

- In mild climate areas, when temporary freezing conditions may occur, run your filtering equipment all night to prevent freezing.
- You are responsible for determining when freezing conditions may occur. If freezing conditions are expected, take the following steps to reduce the risk of freeze damage. ***Freeze damage is not covered under warranty.***

To prevent freeze damage, follow the procedures below:

1. Shut off electrical power for the pump at the circuit breaker.
2. Drain the water out of the pump housing by removing the two thumb-twist drain plugs from the housing. Store the plugs in the pump basket.
3. Cover the motor to protect it from severe rain, snow and ice.

Note: The motor may be covered during a storm, winter storage, etc., but never when operating or expecting operation. Never wrap motor with plastic or other air tight materials during winter storage.

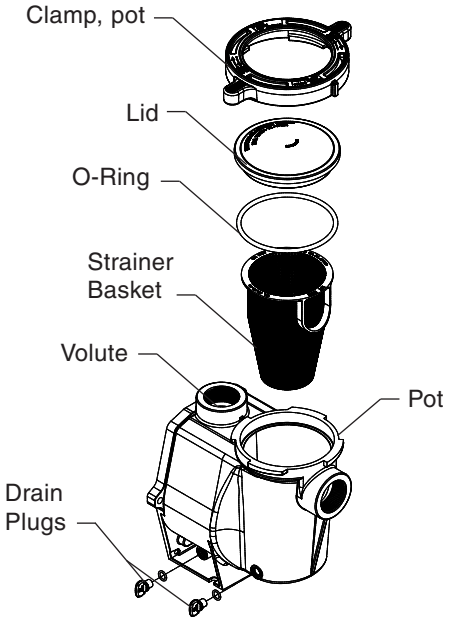

Strainer Pot Assembly

SERVICING

⚠WARNING Always disconnect power to the IntelliFlo® Variable Speed Pump at the circuit breaker and disconnect the communication cable before servicing the pump. Failure to do so could result in death or serious injury to service people, users or others due to electric shock. Read all servicing instructions before working on the pump.

⚠WARNING **DO NOT** open the strainer pot if pump fails to prime or if pump has been operating without water in the strainer pot. Pumps operated in these circumstances may experience a build up of vapor pressure and may contain scalding hot water. Opening the pump may cause serious personal injury. In order to avoid the possibility of personal injury, be sure the suction and discharge valves are open and strainer pot temperature is cool to touch, then open with extreme caution.

⚠CAUTION Be sure not to scratch or mar the polished shaft seal faces; seal will leak if faces are damaged. The polished and lapped faces of the seal could be damaged if not handled with care.

Motor and Drive Care

Protect from heat

1. Shade the motor from the sun.
2. Any enclosure must be well ventilated to prevent overheating.
3. Provide ample cross ventilation.
4. Provide a minimum clearance of three (3) inches behind the motor fan for proper circulation.

Protect against dirt

1. Protect from any foreign matter.
2. Do not store (or spill) chemicals on or near the motor.
3. Avoid sweeping or stirring up dust near the motor while it is operating.
4. If a motor has been damaged by dirt it may void the motor warranty.

Protect against moisture

1. Protect from continuous splashing or continuous sprayed water.
2. Protect from extreme weather such as flooding.
3. If motor internals have become wet - let it dry before operating. Do not allow the pump to operate if it has been flooded.
4. If a motor has been damaged by water it may void the motor warranty.
5. Be sure to close the keypad cover after every use.

Shaft Seal Replacement

The Shaft Seal consists primarily of two parts, a rotating ceramic seal housed in the impeller and a stationary spring seal in the sealplate. The pump requires little or no service other than reasonable care, however, a shaft seal may occasionally become damaged and must be replaced.

Note: The polished and lapped faces of the seal could be damaged if not handled with care.

Pump Disassembly

Tools required:

- 3/32 inch Allen head wrench
- Two (2) 9/16 inch open end wrenches
- 1/4 inch Allen head wrench
- No. 2 Phillips head screwdriver
- Adjustable wrench

To remove and repair the motor subassembly, follow the steps below:

1. Turn off the pump circuit breaker at the main panel.
2. Disconnect the RS-485 communication cable from the pump (if connected to pump).
3. Drain the pump by removing the drain plugs. No tools are required.
4. Remove the four (4) Phillips head screws from the outer corners of the drive top cover.
5. Disconnect the keypad top cover from the drive and set it to the side in a safe place.
6. Remove the three (3) Phillips head screws, located inside the drive, that anchor the drive to the motor.
7. Remove the drive by lifting upwards to separate it from the motor.
8. Use the 9/16 inch wrenches to remove the six (6) bolts that hold the housing (strainer pot/volute) to the rear subassembly.
9. Gently pull the two pump halves apart, removing the rear subassembly.
10. Use a 3/32 inch Allen head wrench to loosen the two (2) holding screws located on the diffuser.
11. Hold the impeller securely in place and remove the impeller lock screw by using a Phillips head screwdriver. The screw is a left-handed thread and loosens in a clockwise direction.

    ⚠CAUTION The pump impeller may have sharp edges that could potentially cut or scratch the user's hands. Pentair recommends that safety gloves be worn when holding the impeller during disassembly and reassembly.

12. Use a 1/4 inch Allen head wrench to hold the motor shaft. The motor shaft has a hex-shaped socket on the end which is accessible through the center of the fan cover.
13. To unscrew the impeller from the shaft, twist the impeller counterclockwise.
14. Remove the four (4) bolts from the seal plate to the motor, using a 9/16 inch wrench.
15. Place the seal plate face down on a flat surface and tap out the carbon spring seat.
16. Clean the seal plate, seal bore, and the motor shaft.

- Pump illustrated parts view on the next page -

Pump Reassembly

1. When installing the replacement shaft seal, use silicone sealant on the metal portion before pressing into the seal plate as shown.

   Note: Use extreme care when applying sealant. Be sure no sealant contacts the seal plate surface or the ceramic seal. Allow sealant to cure overnight before reassembling.
2. Before installing the rotating portion of the seal into the impeller, be sure the impeller is clean. Use a light density soap and water to lubricate the inside of the seal. Press the seal into the impeller with your thumbs and wipe off the ceramic and carbon faces with a clean cloth.
3. Remount the seal plate to the motor.
4. Screw in the impeller lock screw (counterclockwise to tighten).
5. Remount the diffuser onto the seal plate. Be sure the plastic pins and holding screw inserts are aligned.

   Note: Ensure that the seal plate o-ring is clean and free of debris.
6. Grease the diffuser o-ring and seal plate gasket prior to reassembly.
7. Assemble the motor subassembly to the pump housing by using the two (2) through bolts for proper alignment. Do not tighten the through bolts until all six (6) bolts are in place and finger tightened.

   Note: Ensure that the seal plate gasket is properly seated inside of the pump assembly. The seal gasket can be pinched between the seal plate and the pump housing while tightening these six (6) screws, preventing a proper seal and producing a slow leak when the pump is restarted.
8. Reinstall the drive onto the top of the motor.
9. Fill the IntelliFlo® Variable Speed Pump with water.
10. Reinstall the pump lid and plastic clamp. See “Cleaning the Pump Strainer Basket” on page 18 for details
11. Reconnect the RS-485 communication cable to the pump.
12. Prime the pump; refer to “Priming the Pump” on page 5.

Drive Assembly Removal and Installation

⚠WARNING To avoid dangerous or fatal electrical shock hazard, switch OFF power to motor before working on pump or motor.

⚠CAUTION To avoid electrical hazard, never remove the four torx-head screws from the intermediate drive cover. There is a capacitor bank that holds an electrical charge even when there is no power supplied to the pump.

To remove the drive and control panel from the motor assembly:

1. Be sure all electrical breakers and switches are turned off before removing the control panel.
2. Disconnect the RS-485 communication cable from the pump.
3. Remove the four (4) Phillips head screws from the outer corners of the drive top cover.
4. Unplug the keypad top cover from the drive and set it to the side in a safe place.
5. Remove the three (3) Phillips head screws, located inside the drive, that anchor the drive to the motor.
6. Lift up the drive assembly and remove it from the motor adapter located on top of the motor assembly.

   Note: Be careful not to remove the gasket between the drive and motor, it is critical in keeping moisture out of the drive and motor. Replace the gasket if damaged. Do not reassemble with a damaged or missing gasket.

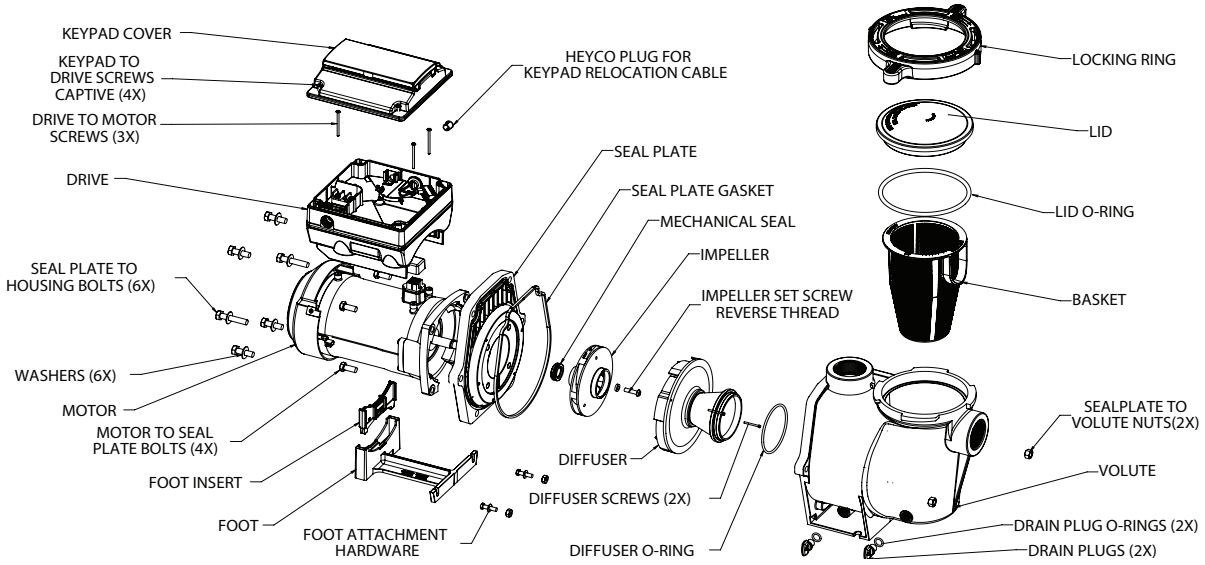

Pump Illustrated Parts View

Drive Assembly Removal and Installation, (cont.)

CAUTION Before installing this product, read and follow all warning notices and instructions on page i - ii.

To install the drive assembly onto the motor assembly:

1. Be sure all electrical breakers and switches are turned off before installing the drive.
2. Be sure that the gasket between the drive and motor is in place. It is critical in keeping moisture out of the drive and motor. Replace the gasket if damaged. Do not reassemble with a damaged or missing gasket.
3. Verify that the three (3) orange motor post caps are in position before placing the drive on the motor assembly.
4. Align the drive assembly with the motor adapter and seat the drive on the motor assembly.
5. Secure and tighten the drive assembly with the three (3) Phillips head screws.
6. Plug the keypad cover back into the drive.
7. Place the keypad cover in the desired orientation on the drive and reattach the four (4) screws in the corners of the drive.

   Note: Ensure that the keypad cable is not being pinched between the drive and keypad cover.

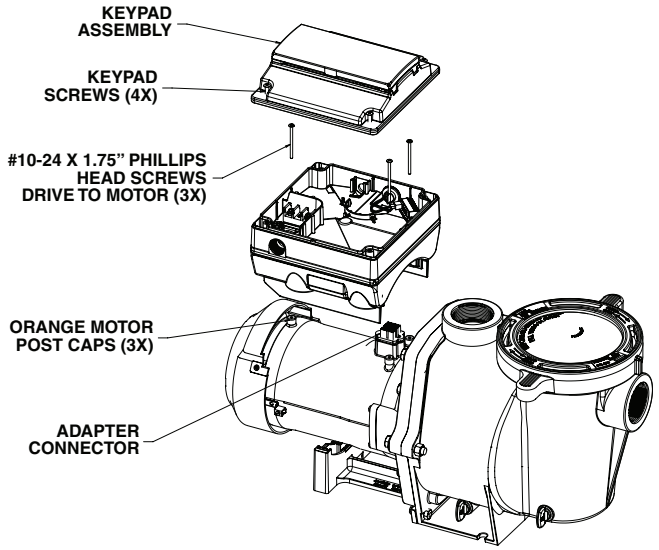

Drive Assembly and Removal

WARNING **FIRE and BURN HAZARD** - The pump motor may run at a high temperatures. To reduce the risk of fire, do not allow leaves, debris, or foreign matter to collect around the pump motor. To avoid burns when handling the motor, shut off the motor and allow it to cool for 20 minutes before servicing. The pump provides an automatic internal cutoff switch to protect the motor from heat damage during operation.

TROUBLESHOOTING

WARNING

Always disconnect power to the IntelliFlo® Variable Speed Pump at the circuit breaker and disconnect the communication cable before servicing the pump. Failure to do so could result in death or serious injury to serviceman, pool users or others due to electric shock. DO NOT attempt to adjust or service without consulting your dealer or a qualified pool technician. Read the entire Installation & User's Guide before attempting to use, service, or adjust the pool filtering system or heater.

Alerts and Warnings

The IntelliFlo® Variable Speed Pump displays all alarms and warnings on the control panel display. When an alarm or warning condition exists, the corresponding light will be lit on the display.

All control panel buttons are disabled until the alarm or warning is acknowledged with the **Reset** button. Pressing the **Reset** button will clear the alarm once the fault condition has been resolved.

Note: The pump will not start if the impeller is rotating.

Power Out/OFF

The incoming supply voltage is less than 170 VAC. The drive faults to protect itself from over current. The drive contains capacitors that keep it powered up long enough to save the current run parameters. If power is restored during this process, approximately 20 seconds, the drive will not restart until completed.

Priming Failure

If the pump is not defined as primed within the "Max Priming Time" it will stop and generate a "Priming Alarm" for 10 minutes, then attempt to prime again. The "Max Priming Time" is set by the user on the priming menu as discussed on page 16. If the pump cannot prime within five attempts it will generate a permanent alarm that must be manually reset.

Overheat

If the drive temperature gets above 54.4° C (130° F) the pump will slowly reduce speed until the over temperature condition clears.

Thermal Mode

When active, the motor will run at the preset RPM until the drive internal temperature increases above the minimum. The pump's internal thermal protection is disabled when connected to an automation system. Thermal protection is provided by selecting YES at the ON WITH FREEZE portion of the circuit function menu in the automation control system. To re-enable the internal thermal protection, the power to the drive must be cycled off then back on. **Important: See explanation of Thermal Mode on page 17.**

Over Current

Indicated that the drive is overloaded or the motor has an electrical problem. The drive will restart 20 seconds after the over current condition clears.

Over Voltage

Indicates excessive supply voltage or an external water source is causing the pump and motor to rotate thereby generating an excessive voltage on the drives internal DC buss. The drive will restart 20 seconds after the over voltage condition clears.

Internal Error

Indicates that the self-monitoring motor control software has encountered an error. Clear the alarm and restart the pump. If this alarm persists, contact Pentair Technical Service at 1-800-831-7133.

Troubleshooting Chart

Problem	Possible Cause	Corrective Action
Pump failure. (For alert display messages, refer to Alerts and Warnings on page 22).	Pump will not prime - Air leak in suction. PRIME ERROR may be displayed.	Check suction piping and valve glands on any suction gate valves. Secure lid on pump strainer pot and be sure lid gasket is in place. Check water level to be sure skimmer is not drawing air.
	Pump will not prime - Not enough water.	Be sure the suction lines, pump, strainer, and pump volute are full of water.
	Pump does not come out of priming mode.	Adjust priming range to a higher setting (default setting is 5).
	Pump completes priming mode too early, and/or there is still a large amount of air in the housing	Adjust priming range to a lower setting (default setting is 5).
	Pump stainer basket is clogged.	Clean pump strainer pot.
	Pump strainer gasket is defective.	Replace gasket.
Reduced capacity and/ or head. (For alert display messages, refer to Alerts and Warnings on page 22).	Air pockets or leaks in suction line. PRIMING FAILURE may be displayed.	Check suction piping and valve glands on any suction gate valves.
	Clogged impeller. PRIMING FAILURE may be displayed.	Turn off electrical power to the pump. Remove the (6) bolts that holds the housing (strainer pot/volute) to seal plate. Slide the motor and seal plate away from the volute. Clean debris from impeller. If debris cannot be removed, complete the following steps: 1. Remove diffuser and o-ring. 2. Remove reverse-thread impeller screw and o-ring. 3. Remove, clean and reinstall impeller. 4. Reinstall reverse-thread impeller screw and o-ring. Reinstall diffuser, and o-ring. Reinstall motor and seal plate into volute. Reinstall seal plate nuts and volute and tighten securely.
	Pump strainer pot clogged. PRIMING FAILURE may be displayed.	Clean suction trap. Clean pump strainer pot.
Inadequate circulation. (For alert display messages, refer to Alerts and Warning on page 22).	Filter or pump basket dirty.	Check trap basket; if plugged, turn pump off and clean basket. Check and clean pool filter.
	Suction/discharge piping is too small.	Increase piping size.
	Speed is set too slow for proper filtration cycle.	Increase filtration run time.

Troubleshooting Chart, (continued)

Problem	Possible Cause	Corrective Action
Electrical problem. (For alert display messages, refer to Alerts and Warning on page 22).	Could appear as a “Low Voltage” alarm.	Check voltage at motor terminals and at panel while pump is running. If low, see wiring instructions or consult power company. Check for loose connections.
	Could appear as “Over Heat” alert.	Check line voltage; if less than 90% or more than 110% of rated voltage consult a licensed electrician. Increase ventilation. Reduce ambient temperature. Tighten any loose wiring connections. Motor runs too hot. Turn power to motor off. Check for proper voltage. Check for proper impeller or impeller rubbing.
Control panel LCD screen displays sporadically or flickers on/off.	Loose drive wiring connection.	Check the connection between the drive and keypad. See image on page 3. The drive wiring connection should be tight.
Mechanical troubles and noise.	The pump motor is running but with loud noise.	If suction and discharge piping are not adequately supported, pump assembly will be strained. Do not mount pump on a wooden platform! Securely mount on concrete platform for quietest performance.
	Foreign matter (gravel, metal, etc.) in pump impeller.	Disassemble pump, clean impeller, follow pump service instructions for reassembly.
	Cavitation.	Improve suction conditions. Increase pipe size. Decrease number of fittings. Increase discharge pressure.
	Speaking noise, especially evident at pump start-up or slow down.	Inspect motor slinger and motor shaft seal behind the slinger (NOT the pump’s mechanical seal). Apply lubrication to the motor shaft rubber seals.
Pump does not respond to automation system commands.	Improper automation setup.	1. Be sure that the communication cable is connected at both ends. 2. Check that the pump local address matches with the address used in the automation control system. 3. Check that the pump has been assigned a circuit name on the automation control system. 4. Ensure that the pump display says “DISPLAY NOT ACTIVE”.
	Communication network inoperative.	A defective device on the network can inhibit the proper operation of other network device. Devices should be disconnected sequentially until the network starts working.

REPLACEMENT PARTS

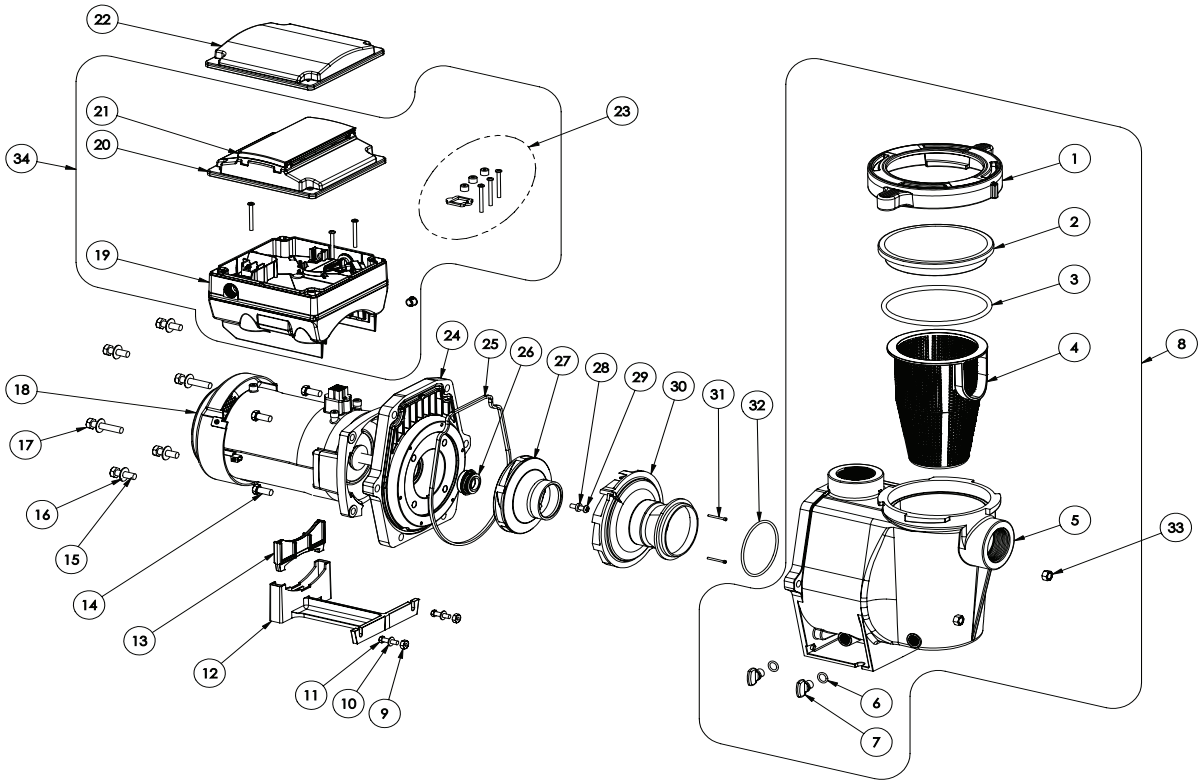

Item No.	Description	Almond Part #	Black Part #
1	Clamp, Cam and Ramp	357199	357150
2	See Through Lid	357151	
3	Lid O-ring	350013	
4	Stainer Basket	070387	
5	Volute	350015	357157
6	O-ring 112 for Drain Plug (Qty2)	192115	
7	Drain Plug (Qty2)	071131	357161
8	Volute Kit (Includes Item #1-7)	357243	357244
9	Nut, 1/4-20 Hex. SS (Qty2)	071406	
10	Washer, Flat 1/4" ID x 5/8" OD (Qty2)	072183	
11	Screw, 1/4-20 x 1" Hex Cap SS (Qty2)	071657	
12	Foot	070927	357159
13	Foot Insert, Pump Motor Support	070929	357160
14	Bolt, Hex Head 3/8-16 x .875" (Qty4)	070429	
15	Bolt, Hex Head 3/8-16 x 1.25" (Qty4)	070430	
16	Washer, Flat 3/8" ID x 7/8" OD (Qty6)	072184	
17	Bolt, Hex Head 3/8-16 x 2" (Qty2)	070431	
18	Motor, 3.2kW 10 Pole	350305S	350306S
19	Drive, Variable Speed	356878Z	356892Z
20	Drive Cover Kit (Includes Item #21)	357527Z	358527Z
21	Keypad Cover	400100	401100
22	Keypad Relocation Kit (Includes Keypad Relocation Cable and Blank Drive Cover)	356904Z	356905Z
23	Drive Hardware Kit (Includes Drive Screws, Drive Gasket and Screw Caps)	355685	

Item No.	Description	Almond Part #	Black Part #
24	Seal Plate	074564	357158
25	Seal Plate Gasket	357100	
26	Mechanical Seal	071734S	
	Mechanical Seal, Ozone/Salt Resistant	071732S	
27	Impeller, 3 HP (Mfg. before 11/20)	073131	
	Impeller, 3 HP (Mfg. after 11/20)	356237	
	Impeller, IntelliFlo i1	073128	
	Impeller, IntelliFlo i2	073131A	
28	Rubber Washer, Impeller Set Screw	075713	
29	Impeller Set Screw, 1/4-20 LH Thread	071652	
30	Diffuser, 3 HP (Mfg. before 11/20)	072928	
	Diffuser, 3 HP (Mfg. after 11/20)	356238	
	Diffuser, i1	072930	
	Diffuser, i2	072927	
31	Diffuser Set Screw, 4-40 x 1-1/8 (Qty2)	071660	
32	Diffuser O-ring	355227	
33	Nut, 3/8-16 Brass, Nickel Plated (Qty2)	071403	
34	Drive Kit Assembly (Includes Item #19-21 & 23)	356879Z	356893Z
-	50 Ft. Communication Cable	350122	
-	Seal Plate Kit w/ Mechanical Seal (Includes Item #24-26)	350202	350203
-	Power End, 3HP	354044	N/A
-	Volute and Seal Plate Kit (Includes Item #1-7 & 24-26)	357149	N/A

(-) Not Shown

TECHNICAL DATA

Pump Dimensions

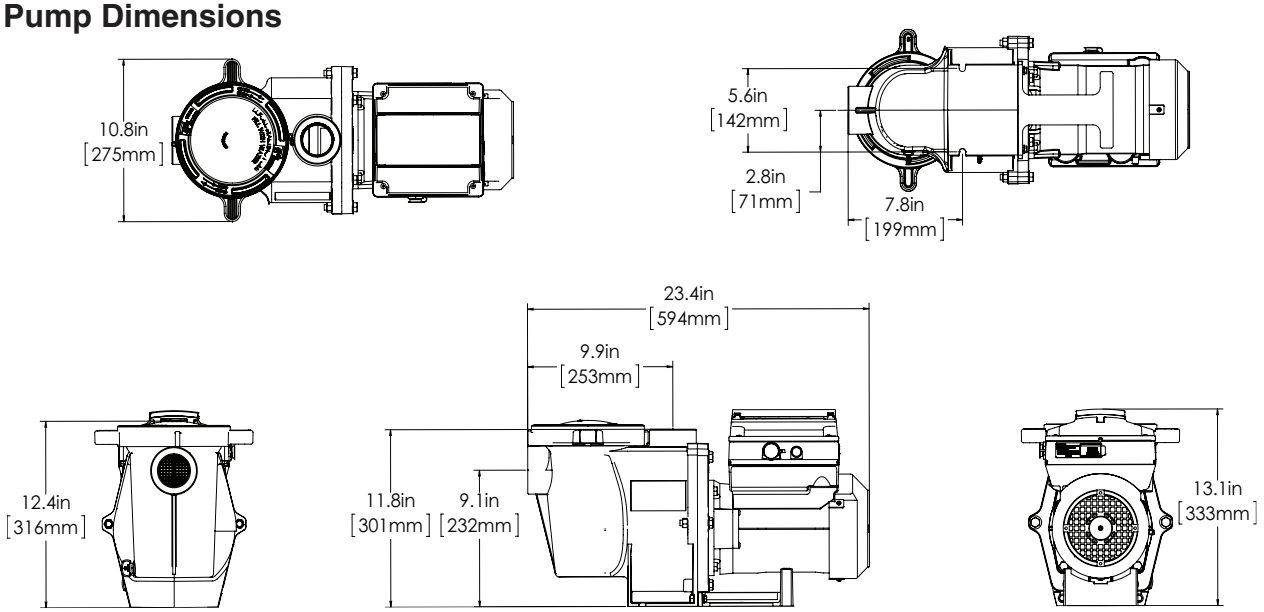

Electrical Specifications

Circuit Protection: Two-pole 20 AMP device at the Electrical Panel.

Input: 230 VAC, 50/60 Hz, 3200 Watts Maximum, 1 phase

Note: Refer to the pump motor label, and all national and local electrical codes, for specific electrical requirements and specifications.

WEF VALUES	
EC-011028	WEF 6.9 THP 3.95
011059 EC-011059	WEF 7.5 THP 3.95
011060 EC-011060	WEF 6.9 THP 3.95

Pump Performance Curves (IntelliFlo i1 Pumps)

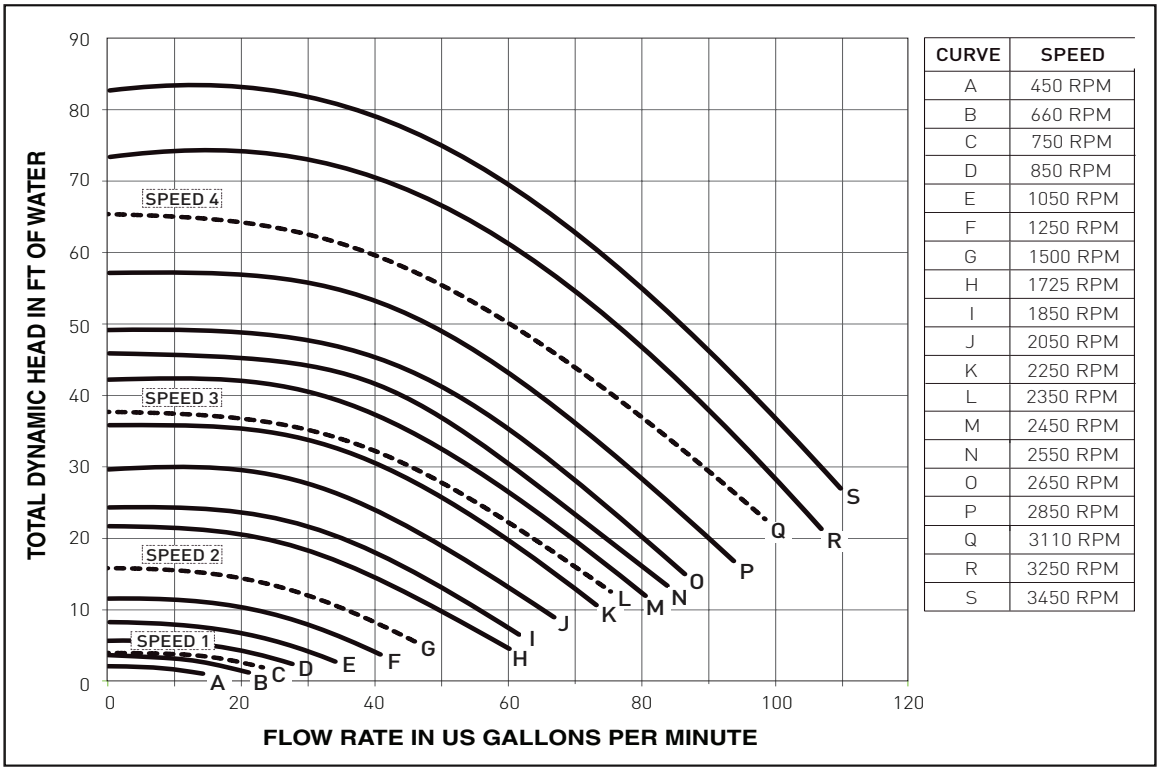

CURVE	SPEED
A	450 RPM
B	660 RPM
C	750 RPM
D	850 RPM
E	1050 RPM
F	1250 RPM
G	1500 RPM
H	1725 RPM
I	1850 RPM
J	2050 RPM
K	2250 RPM
L	2350 RPM
M	2450 RPM
N	2550 RPM
O	2650 RPM
P	2850 RPM
Q	3110 RPM
R	3250 RPM
S	3450 RPM

Pump Performance Curves (IntelliFlo i2 Pumps)

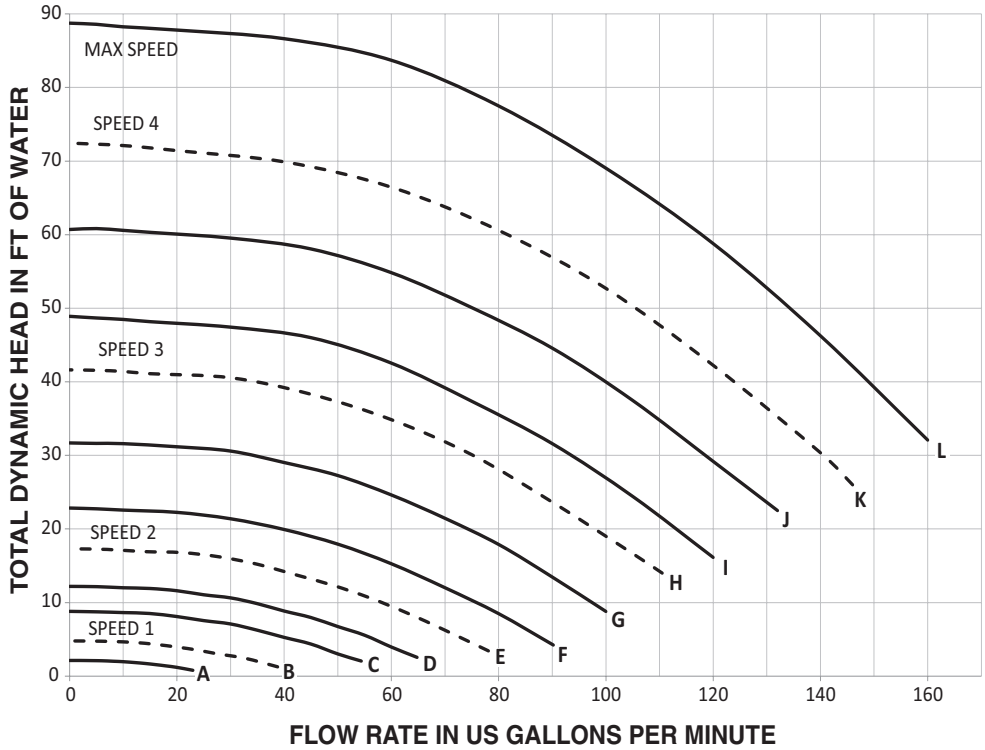

CURVE	SPEED
A	450 RPM
B	750 RPM
C	1050 RPM
D	1250 RPM
E	1500 RPM
F	1725 RPM
G	2050 RPM
H	2350 RPM
I	2550 RPM
J	2850 RPM
K	3110 RPM
L	3450 RPM

Pump Performance Curves (3HP IntelliFlo Pumps)

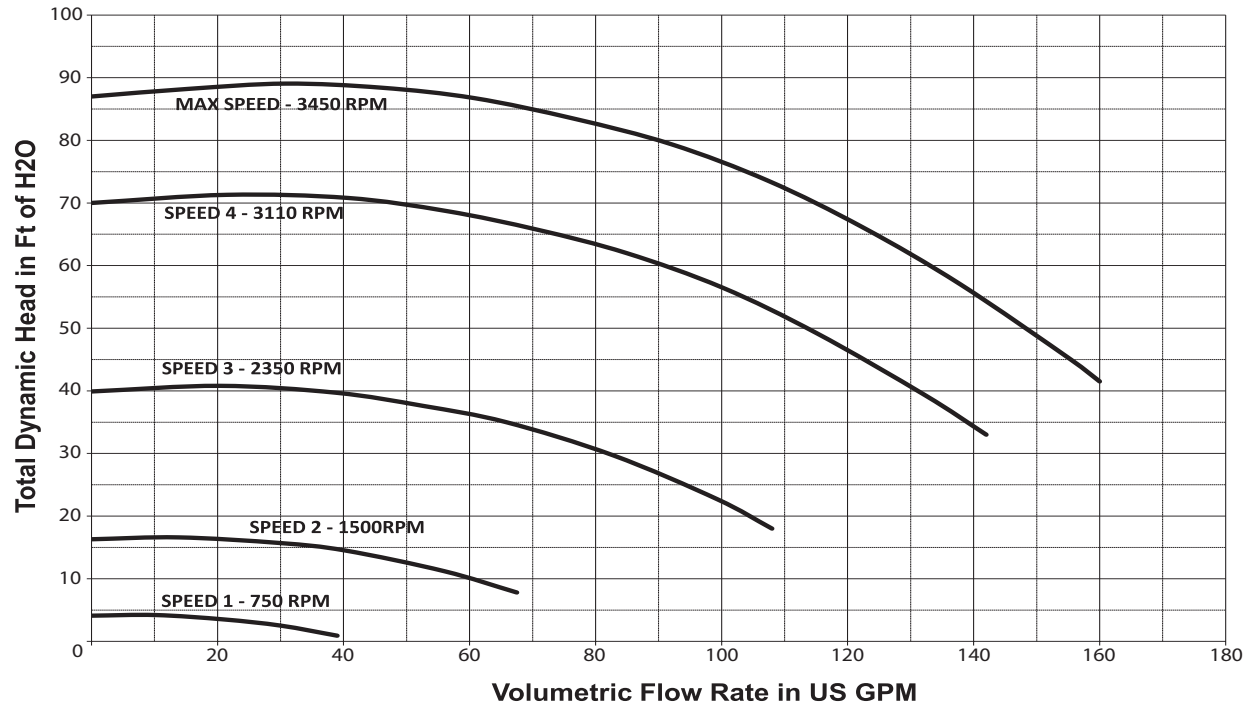

Operator Control Panel: Pump Menu Quick Reference Guide

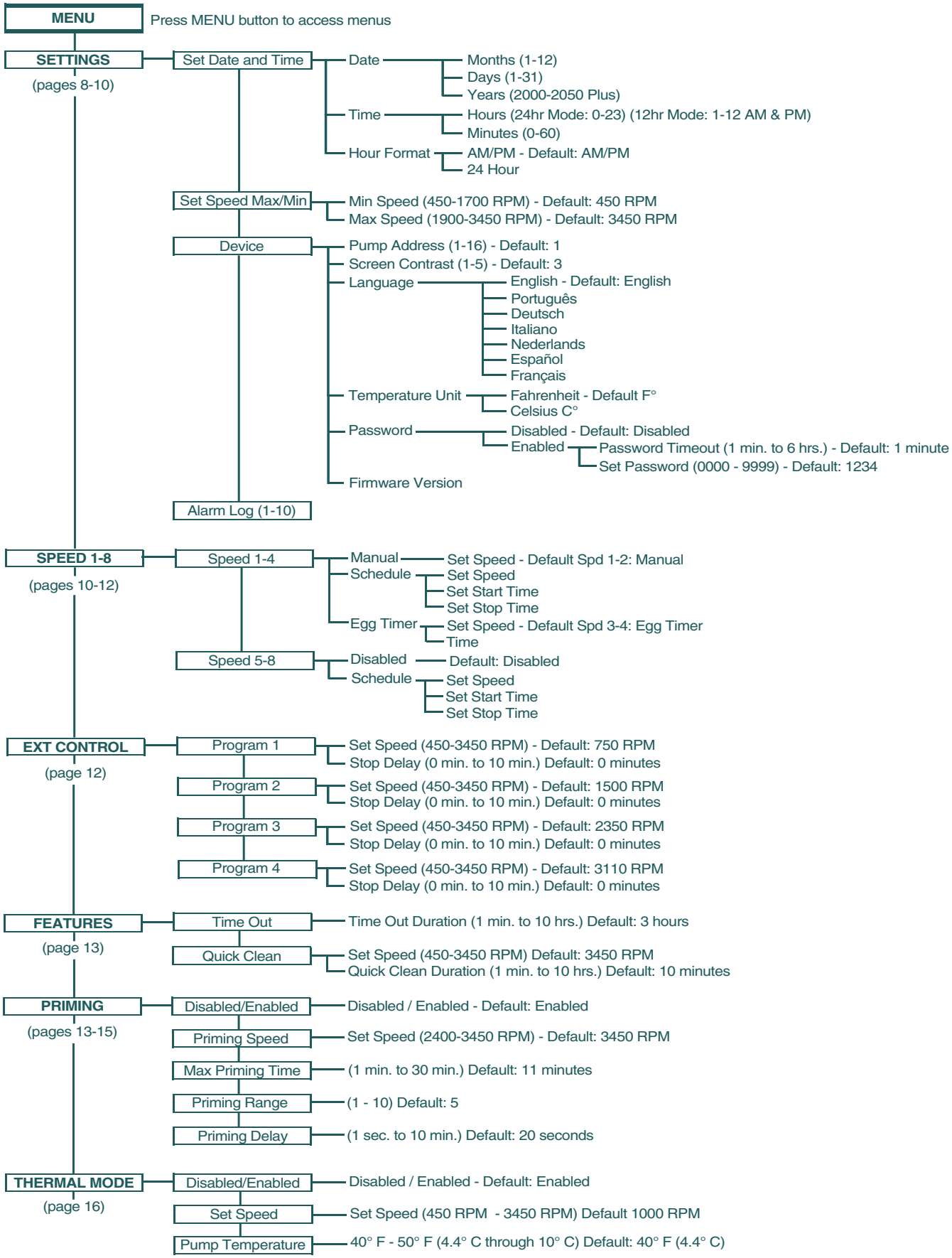

NOTES

NOTES

NOTES

LIT. PKG. P/N 356920

PENTAIR

1620 HAWKINS AVE., SANFORD, NC 27330 • (919) 566-8000
10951 WEST LOS ANGELES AVE., MOORPARK, CA 93021 • (805) 553-5000

WWW.PENTAIR.COM

All indicated Pentair trademarks and logos are property of Pentair. Third party registered and unregistered trademarks and logos are the property of their respective owners. Other trademarks and trade names are those of their respective owners. Because we are continuously improving our products and services, Pentair reserves the right to change specifications without prior notice.

© 2020 Pentair. All rights reserved. This document is subject to change without notice.

P/N 356919 REV. C 9/29/20