ISCC200
Rev. D

HAYWARD®

OWNER'S MANUAL

INSTALLATION, OPERATION, & PARTS

*X*Stream™ Filtration Series

The Hayward® *X*Stream™ Filtration Series is specifically designed for the demanding requirements of today's above-ground swimming pools. The advanced design reduces maintenance requirements while providing superior performance.

To prevent potential injury and to avoid unnecessary service calls, read this manual carefully and completely.

⚠ **CAUTION – We highly recommend a qualified professional install and service this product.**

⚠ **WARNING – This manual contains important safety information that must be furnished to the end user of this product. FAILURE TO READ AND FOLLOW ALL INSTRUCTIONS COULD RESULT IN SERIOUS INJURY.**

SAVE THIS INSTRUCTION MANUAL

HAYWARD POOL PRODUCTS, INC.

Corporate Headquarters:
620 Division Street
Elizabeth, NJ 07207

Canada:
2880 Plymouth Drive
Oakville, Ontario L6H 5R4

U.S.A:
1 Hayward Industrial Drive
Clemmons, NC 27012

2935 Sidco Drive
Nashville, TN 37204

2875 Pomona Blvd.
Pomona, CA 91768

Europe:
Parc Industriel de la plaine de l'Ain
Allêe des Chênes
01150 Saint Vulbas
France

PRODUCT REGISTRATION
(Retain For Your Records)

DATE OF INSTALLATION _____

INITIAL PRESSURE GAUGE READING (CLEAN FILTER) _____

PUMP MODEL _____ HORSEPOWER _____

FILTER MODEL _____ SERIAL NUMBER _____

IMPORTANT SAFETY INSTRUCTIONS

When installing and using this electrical equipment, basic safety precautions should always be followed, including the following: Failure to follow instructions may result in injury.

READ AND FOLLOW ALL INSTRUCTIONS IN THIS OWNER'S MANUAL AND ON EQUIPMENT.

KEEP SAFETY LABELS IN GOOD CONDITION AND REPLACE IF MISSING OR DAMAGED.

⚠ **WARNING** – To reduce risk of injury, do not permit children to use or climb on this product. The ANSI/NSPI 4 Standard (above-ground and on-ground pools) advises that components such as the filtration system, pumps, and heaters be positioned to prevent their being used as a means of access to the pool by young children. Closely supervise children at all times.

⚠ **CAUTION** – The *X*Stream™ Filtration Series is intended for use on permanently installed above-ground swimming pools and may also be used with hot tubs and spas if so marked. Do NOT use with storable pools. A permanently installed pool is constructed in or on the ground or in a building such that it cannot be readily disassembled for storage. A storable pool is constructed so that it is capable of being readily disassembled for storage and reassembled to its original integrity.

Though this product is designed for outdoor use, it is strongly advised to protect the electrical components from the weather. Select a well-drained area, one that will not flood when it rains. It requires free circulation of air for cooling. Do not install in a damp or non-ventilated location.

Bond motor to pool structure. Use a solid copper conductor, size or larger. Run wire from external bonding lug to reinforcing rod or mesh. Connect a No. 8 AWG (8.4 mm²) solid copper bonding wire to the pressure wire connector provided on the motor housing and to all metal parts of swimming pool, spa, or hot tub, and to all electrical equipment, metal piping or conduit within 5 ft. (1.5 m) of inside walls of swimming pool, spa, or hot tub. (In Canada use No. 6 AWG bonding wire.)

NOTE: The National Electrical Code (NEC) permits use of a cord with a maximum 3 ft. (1 m) length. If your pump is equipped with a cord complying with the NEC, the following three (3) items apply.

⚠ **WARNING – Risk of Electric Shock.** Connect only to a grounding type receptacle protected by a Ground Fault Circuit Interrupter (GFCI). Contact a qualified electrician if you cannot verify that the receptacle is protected by a GFCI.

⚠ **WARNING –** To reduce the risk of electric shock replace damaged cord immediately. Do NOT bury cord. Locate cord to minimize abuse from lawn mowers, hedge trimmers and other equipment.

⚠ **WARNING –** To reduce the risk of electric shock, do NOT use an extension cord to connect unit to electric supply. Provide a properly located outlet. Qualified personnel MUST do all electrical wiring.

⚠ **CAUTION –** All suction and discharge valves **MUST** be **OPEN** when starting the filter system. Failure to do so could result in severe personal injury and/or property damage. All drains and suction covers MUST have properly installed covers securely attached with the screws supplied with the covers. If screws are lost, order replacement parts from your supplier.

⚠ **DANGER – Suction Entrapment Hazard.** Never use the pool or spa if a drain cover is damaged, cracked, missing, or not securely attached. Suction in drains and suction outlets can cause drowning, disembowelment, hair or body entrapment, severe injury, and death. Disembowelment, entrapment, or drowning is possible when body parts or hair come in contact with damaged, broken, cracked, missing, or unsecured drain covers and suction outlets. Suction from pumps with only one drain or suction outlet can cause disembowelment, entrapment, or drowning. Pumps for pools and spas require two (2) functioning suction outlets at least three (3) feet apart, on two (2) walls or on the floor and one (1) wall of the pool or spa. Installation of pump and suction outlets must be in compliance with all applicable local building codes. Replace damaged, broken, cracked, missing, or unsecured drain covers and suction outlets immediately.

⚠ **WARNING – Hazardous Pressure.** Pumps, filters, and other equipment/components of a swimming pool filtration system operate under pressure. Incorrectly installed and/or improperly tested filtration equipment and/or components may fail resulting in injury and/or property damage. A qualified pool professional MUST conduct all pressure tests. This product is intended for above-ground/on-ground swimming pool applications only. Do NOT connect to a high-pressure system such as a municipal water main. To prevent explosion caused by entrapped air in the filtration system use provided air relief valve to bleed air from the system. Confirm that ALL filtration system component clamps, bolts, and covers have been tightened to the manufacturer's recommendations.

⚠ **WARNING –** Never operate or test the filtration system at more than 30 PSI.

SAVE THESE INSTRUCTIONS

Product Specifications

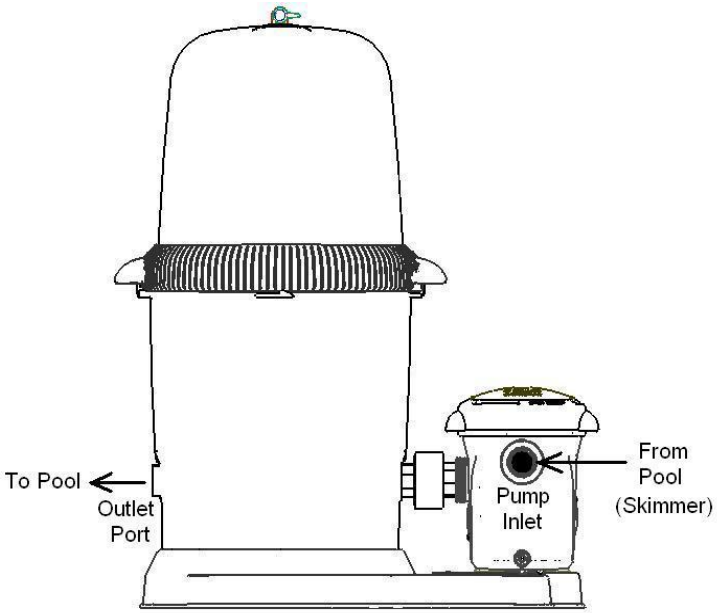

*X*Stream™ Filtration Components

Filter Type:	Full-Flow Cartridge Element
Filter Tank:	Injection-Molded PermaGlass XL™
Filter Element:	Reinforced Polyester Element
Fastenings:	Easy-Lok™ Ring Assembly
Mounting Base:	Injection-Molded PermaGlass XL™

*X*Stream™ Filtration Performance Data

Model No.		**CC1000**	**CC1500**	**CC2000**
Effective Filtration Area		100 FT²	150 FT²	200 FT²
Design Flow Rate		80 GPM	100 GPM	120 GPM
Maximum Working Pressure		30 PSI	30 PSI	30 PSI
Required Clearance:				
Side		18”	18”	18”
Above		24”	30”	36”
Replacement Hayward Cartridge		CCX1000RE	CCX1500RE	CCX2000RE
Turnover	8 Hours	38,400 GAL	48,000 GAL	57,600 GAL
	12 Hours	57,600 GAL	72,000 GAL	86,400 GAL

General Information

Introduction

This manual contains information for the proper installation and operation of the Hayward® *X*Stream™ Filtration Series. All *X*Stream™ Filtration models are high performance, above-ground swimming pool filters. Instructions in this manual **MUST** be followed precisely.

Product Features

- Engineered for easy use with flexible or rigid plumbing.
- Sleek, flush mounted pressure gauge.
- Extra large dirt capacity.
- Quick release, high capacity air relief valve.
- Glass reinforced, non-corrosive Permaglass XL™ filter tank will provide years of trouble-free operation.
- Easy-Lok™ ring design allows quick access to all internal components in a single turn.

Installation Instructions

Filter Location

Set the filter on firm, level ground. Select a well-drained area, one that will not flood when it rains. Position the filter so that it may drain by gravity. The tank should be positioned for easy access to the internals, pressure gauge, and air relief valve.

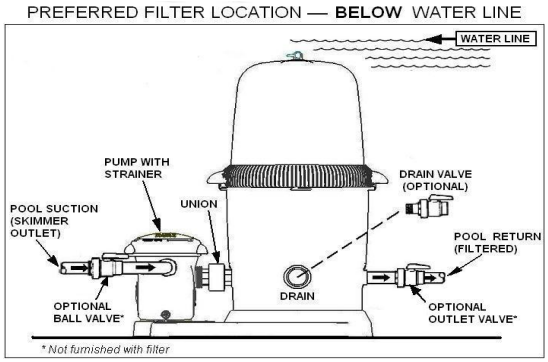

NOTE: ANSI/NSPI-4 Article V, standard for above-ground and on-ground pools, advises that components such as the filtration system, pumps and heater be positioned so as to prevent their being used as a means of access to the pool by young children.

Plumbing

To facilitate servicing of the filter system and to allow for indoor storage during the winter months, installing union connections at the suction and outlet ports is recommended.

Use **Teflon tape** to seal threaded connections on molded plastic components. All plastic fittings must be new or thoroughly cleaned before use. **NOTE: Do NOT use Plumber's Pipe Dope as it may cause cracking of the plastic components.** When applying **Teflon tape** to plastic threads, wrap the entire threaded portion of the male fitting with one to two layers of tape. Wind the tape clockwise as you face the open end of the fitting, beginning at the end of the fitting.

The pump suction and outlet ports have molded-in thread stops. Do **NOT** attempt to force hose connector fitting past this stop. It is only necessary to tighten fittings enough to prevent leakage. Tighten fitting by hand and then use a tool to engage fitting an additional 1 ½ turns. Use care when using Teflon tape as friction is reduced considerably; **do NOT over-tighten** fitting or you may cause damage. If leaks occur, remove connector, clean off old Teflon tape, re-wrap with one to two additional layers of Teflon tape, and re-install connector. Use 1 ½" I.D. flexible plastic pipe with hose adapter fittings and hose clamps. If rigid PVC is used, be sure to install Hayward SP1500UNPAK2 union connectors for easy servicing.

All plumbing connections on the *X*Stream™ Filter are 1 ½" N.P.T. When making connections, use plastic male-end adapters. Apply three (3) turns of Teflon tape or plastic pipe sealant to the male threads. Screw the fitting into the thread hand-tight; then using a wrench, tighten one more full turn, if necessary. (NOTE: Adapters have varying tolerances and over-tightening with a wrench may only cause damage to the filter.) Ball type valves are recommended where needed.

Connect the pool suction plumbing between the skimmer and the pump. Connect the pool return plumbing to the **OUTLET** port at the bottom of the filter body.

A filter drain or plug is furnished with each filter and is all that is needed for complete filter draining. A manual air relief valve is furnished to aid in the bleeding of unwanted air when starting or draining the filter.

Start-Up & Operation

New Installation/Seasonal Start-Up

1. Close drain valve at the base of filter.
2. Secure and lock Easy-Lok™ ring.
3. Open air relief valve (Turn lever to left).
4. Open valves (Optional suction & return valves).

⚠ CAUTION – All suction and outlet valves MUST be OPEN before operating the filter system. Failure to do so could cause severe personal injury and/or property damage.

5. Prime and start the pump per manufacturer's instructions.
6. Once air has escaped the filter and a steady stream of water is flowing from the air relief valve, close the air relief valve and note the pressure gauge reading.

Dis-Assembly & Assembly

Cleaning/Removing Cartridge Element

NOTE: An indication that the filter needs cleaning is when the pressure gauge rises 5-7 PSI above its normal pressure.

1. Shut off the pump.
2. Close valves* (*optional: suction & return valves).
3. Open air relief valve.
4. Open drain plug (located at the base of the filter body).
5. Depress safety latches (located on the underside of the locking ring handles) and unscrew locking ring in a counter-clockwise direction. Remove lid from filter body.
6. Lift out filter element and clean as instructed in "Preventative Maintenance" section of this manual.

Re-Installing Cartridge Element

1. Clean debris from bottom of filter tank.
2. Replace element evenly on the collector hub in bottom of the filter body.
3. Place lid evenly on filter body and turn Easy-Lok™ ring clockwise until the safety latches engage securely.
4. Close and secure drain plug (located at the base of filter body).
5. Proceed as in "Start-Up & Operation".

Preventative Maintenance

Cleaning Cartridge Filter

NOTE: Clean the cartridge when filter canister pressure reaches 5-7 PSI above the initial system or new cartridge starting pressure.

1. Remove the cartridge element from the filter housing following the directions in the "Cleaning/Removing Cartridge Element" section above.

2. Pressure wash the cartridge element inside and out with the Hayward Jet-action Cleaning Wand (EC2024) or a garden hose with a high-pressure nozzle. Work from top-down, holding the nozzle at a 45-degree angle. Rinse until all dirt and debris are gone. Brush pleated surface areas and allow to dry.

Preventative Maintenance (cont.)

Cleaning Cartridge Filter (cont.)

To remove algae, suntan oil, and body oils:
Soak the cartridge element for at least one (1) hour (overnight is most effective) in: 1) a commercial filter cleaner; **OR** 2) One (1) cup Tri-Sodium Phosphate (TSP) to five (5) gallons water; **OR** 3) One (1) cup dishwasher detergent to five (5) gallons water.

Rinse cartridge element to remove oils and cleaning solution.

To remove calcium carbonate (residue from calcium hypochlorite), iron, or other mineral deposits:
Soak the cartridge element in a solution of one (1) part Muriatic Acid to twenty (20) parts water, until all bubbling stops.

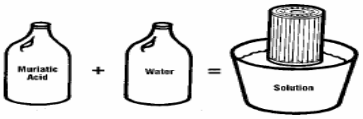

⚠ **WARNING – Do NOT add water to acid.**

⚠ **WARNING – Do NOT mix chlorine and acid.**

⚠ **WARNING – Use a plastic container and take extreme care – harmful to eyes, skin, and clothing. Always wear rubber gloves and eye protection.**

⚠ **CAUTION – Failure to remove all oils and cleaning solution before acid soaking will result in a permanent restriction of water flow and cause premature cartridge failure.**

3. Rinse the cartridge element clean and re-assemble filter housing.

Vacuuming

Vacuuming can be performed directly into the filter whenever needed. For fastest results, clean the filter before and after each vacuuming. For heavy spring clean ups, we recommend using a Hayward SP0727 diverter valve to bypass the filter and accelerate the clean up process. Consult your local Hayward dealer for a detailed explanation.

Winterization

In areas where sub-freezing temperatures can be expected, the filter should be drained and/or removed from its operating location and stored indoors. Clean the cartridge element at the end of the pool season by using the Hayward Jet-action Cleaning Wand (EC2024) or a garden hose with a high-pressure nozzle (See "Cleaning Cartridge Filter" instructions in this manual).

Troubleshooting

	Problem	What to Look for	Treatment
Damaged Cartridge Element	Dirty, clogged, or abused element	Dirt, debris, or tear in pleats or folds	Clean or replace element
	Oversized pump - Produces excessive flow rates and/or pressures	Flattened pleats or folds; Embedded dirt or debris into the filter material; Breaking of internal core of the element; Breaking or splitting of the end plates of the element	Re-size pump
Algae	Very dirty pool water	Algae buildup on the pool walls	Frequent cartridge cleaning or replacement; Consult professional pool company for pool chemistry instructions.

Replacement Parts

Parts Diagram

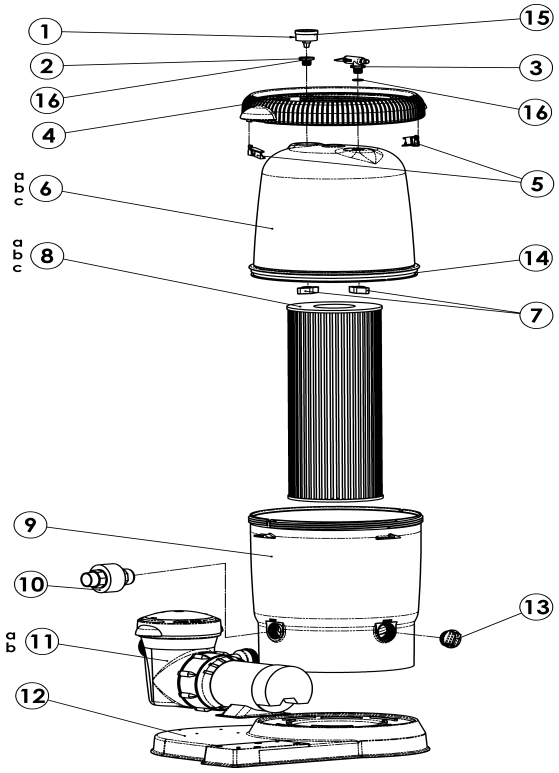

Parts Listing

Ref. No.	Part No.	Description	Ctn. Qty.	No. Req'd
1	ECX27091	Pressure Gauge	10	1
2	CCX1000L	Threaded Adapter for Pressure Gauge	10	1
3	CCX1000V	Air Relief Assembly with 'O' Ring	10	1
4	CCX1000D	Lock Ring Assembly with 2 Safety Clips	1	1
5	CCX1000H	Safety Clips for Lock Ring (Set of 2)	10	1
6a	CCX1000C	Filter Lid with Lock Ring, 100 sq. ft.	1	1
6b	CCX1500C	Filter Lid with Lock Ring, 150 sq. ft.	1	1
6c	CCX2000C	Filter Lid with Lock Ring, 200 sq. ft.	1	1
7	CCX1000N	Adapter Nut	10	2
8a	CCX1000RE	Cartridge Element, 100 sq. ft.	1	1
8b	CCX1500RE	Cartridge Element, 150 sq. ft.	1	1
8c	CCX2000RE	Cartridge Element, 200 sq. ft.	1	1
9	CCX1000B	Filter, Lower Body	1	1
10	SP1480BLK	Self Aligning Union, Black	50	1
11a	SP1592	1 HP Power-Flo Matrix Pump	1	1
11b	SP1593	1-1/2 HP Power-Flo Matrix Pump	1	1
12	CCX1000A	Base, Standard	1	1
13	SP1022CBLK	Drain Plug with 'O' Ring	100	1
14	CCX1000G	Body O-ring	2	1
15	SPX1500W	Pressure Gauge 'O' Ring	10	1
16	CCX1000Z5	'O' Rings for Gauge Adapter & Air Relief (Set of 2)	10	1

HAYWARD® LIMITED WARRANTY

This filter system was inspected before shipment from our plant. To original purchasers of this filter system, Hayward Pool Products, Inc., 620 Division Street, Elizabeth, New Jersey, warrants its products free from defects in materials and workmanship for a period of **ONE (1)** year from the date of purchase.

Parts which fail or become defective during the warranty period, except as a result of freezing, negligence, improper installation, use, or care, shall be repaired or replaced, at our option, without charge, within 90 days of the receipt of defective product, barring unforeseen delays.

Additionally, to original purchasers of this filter system, Hayward Pool Products, Inc., warrants its filter heads and filter bodies made of Perma-Glass XL™ material to be free from defects in materials and workmanship for a period of **ONE (1)** year from the date of purchase.

Filter heads and filter bodies which become defective during the warranty period, except as a result of freezing, negligence, improper installation, use, or care, or as a result of use in association with an automatic valving system, shall be repaired or replaced, at our option, without charge.

To obtain warranty replacements or repair, defective components or parts should be returned, transportation paid, to the place of purchase, or to the nearest authorized Hayward service center. For further Hayward dealer or service center information, contact Hayward customer service department. No returns may be made directly to the factory without the express written authorization of Hayward Pool Products, Inc.

All other conditions and terms of the standard warranty apply.

Hayward shall not be responsible for cartage, removal and/or reinstallation labor or any other such costs incurred in obtaining warranty replacements.

The Hayward Pool Products warranty does not apply to components manufactured by others. For such products, the warranty established by the respective manufacturer will apply.

Some states do not allow a limitation on how long an implied warranty lasts, or the exclusion or limitation of incidental or consequential damages, so the above limitation or exclusion may not apply to you.

This warranty gives you specific legal rights, and you may also have other rights, which vary from state to state.

***Supersedes all previous publications.**

Hayward Pool Products, Inc.
620 Division Street
Elizabeth, NJ 07207

▲Retain this Warranty Certificate (upper portion) in a safe and convenient location for your records.

▼DETACH HERE: Fill out bottom portion completely and mail within 10 days of purchase/installation.

HAYWARD®

Mail to: **Hayward Pool Products, Inc., 620 Division Street, Elizabeth, NJ 07207, Attn: Warranty Dept.**

Warranty Registration Card

Name_____

Address_____

City_____**State**_____ **Zip** _____

E-mail Address:_____

Product Purchased_____

Product Serial No._____

☐ **New Installation** ☐ **Replacement**

Type of Pool:

☐ **In-ground** ☐ **Vinyl** ☐ **Fiberglass** ☐ **Gunite** ☐ **Above-ground**

Size of Pool_____

Years pool has been in service ☐ less than 1 ☐ 1-3 ☐ 3-5 ☐ 5-10

Purchased from:
Company name_____

Address_____

City_____**State**_____**Zip**_____

Please send me more information on these other products from Hayward:

☐ **Pump** ☐ **Filter** ☐ **Automatic Pool Cleaner**
☐ **Light** ☐ **Chlorinator** ☐ **Skimmer**
☐ **Heater**